VOLUME 6 ROAD GEOMETRY
SECTION 1 LINKS

PART 1

TD 9/93 - AMENDMENT NO 1

HIGHWAY LINK DESIGN

SUMMARY

The Standards sets out the elements of design and principles for their co-ordination, for geometric design of an existing carriageway or new build situation. The Standards include a revised Chapter 5 and deletes Annexes B and C.

INSTRUCTIONS FOR USE

This amendment is to be incorporated in the Manual.

1. Remove existing contents page for Volume 6, and insert new contents page for Volume 6, dated February 2002.
2. Remove existing cover sheet for Highway Link Design and insert new cover sheet.
3. Remove existing TD 9/93 contents sheet and insert new TD 9/93 Amdt No 1 contents sheet.
4. Remove existing “Detailed contents of Chapters 1-8” sheet and insert new sheet dated February 2002.
5. Remove existing Chapter 0 “Foreword” pages 0/1, 0/2 and 0/3 and insert pages 0/1 and 0/2 dated February 2002.
6. Remove existing Chapter 5 (including Annexes B and C), and insert new Chapter 5.
7. Insert the Amendment Sheet at the front of the document after the new cover sheet.
8. Enter details of Amendment No 1 on Registration of Amendment sheet and sign and date to confirm the amendment has been incorporated.
9. Remove sheets 9/1 and 10/1 and insert new sheets dated February 2002.
10. Archive this sheet as appropriate.

Note: A quarterly index with a full set of Volume Contents Pages is available separately from The Stationery Office Ltd.

DESIGN MANUAL FOR ROADS AND BRIDGES

TD 9/93
Incorporating
Amdt No 1 dated
February 2002

THE HIGHWAYS AGENCY

SCOTTISH EXECUTIVE DEVELOPMENT DEPARTMENT

THE NATIONAL ASSEMBLY FOR WALES
CYNULLIAD CENEDLAETHOL CYMRU

THE DEPARTMENT FOR REGIONAL DEVELOPMENT
NORTHERN IRELAND

Highway Link Design

Summary: The Standards sets out the elements of design and principles for their co-ordination, for geometric design of an existing carriageway or new build situation. The Standards include a revised Chapter 5 and deletes Annexes B and C.

REGISTRATION OF AMENDMENTS

Amend No	Page No	Signature & Date of incorporation of amendments	Amend No	Page No	Signature & Date of incorporation of amendments

REGISTRATION OF AMENDMENTS

Amend No	Page No	Signature & Date of incorporation of amendments	Amend No	Page No	Signature & Date of incorporation of amendments

VOLUME 6 ROAD GEOMETRY
SECTION 1 LINKS

PART 1

TD 9/93 - AMENDMENT NO 1

HIGHWAY LINK DESIGN

Contents

Chapter

0. Foreword

1. Design Speed

2. Sight Distance

3. Horizontal Alignment

4. Vertical Alignment

5. Climbing Lanes

6. Introduction to Coordinated Link Design

7. Single 2 Lane Carriageway Roads

8. Dual Carriageways and Motorways

9. References

10. Enquiries

Annex A Harmonic Mean Visibility

Detailed Contents of Chapters 1 to 8

ELEMENTS OF DESIGN

Chapter

		Page
1.	Design Speed	
	General	1/1
	Factors Affecting Speed	1/1
	Selection of Design Speed	1/2
	Design Speed Related Parameters	1/3
	Changeover of Design Speed Standards	1/4
	Connection to Existing Roads	1/4
	Selection of Parameter Values	1/4
	Relaxations	1/4
	Departures	1/6
2.	Sight Distance	
	Stopping Sight Distance	2/1
	Full Overtaking Sight Distance	2/1
	Obstructions to Sight Distance	2/1
	Relaxations	2/2
3.	Horizontal Alignment	
	Road Camber	3/1
	Superelevation	3/1
	Desirable Minimum Radius	3/2
	Relaxations	3/2
	Appearance and Drainage	3/2
	Application of Superelevation	3/2
	Widening on Curves	3/2
	Lane Width Reductions at Pinch Points	3/3
	Transitions	3/3
	The Effect of Sight Distance at Horizontal Curves	3/3
4.	Vertical Alignment	
	Gradients	4/1
	Vertical Curves	4/1
	Relaxations	4/2
5.	Climbing Lanes	
	Introduction	5/1
	Scheme Appraisal	5/1
	Layout - Single Carriageways	5/6
	Layout - Dual Carriageways	5/19

COORDINATED LINK DESIGN

Chapter

		Page
6.	Introduction to Coordinated Link Design	
	General	6/1
	Rural Roads	6/1
	Urban Roads	6/1
7.	Single 2 Lane Carriageway Roads	
	General Principles	7/1
	Overtaking Sections	7/1
	Non-overtaking Sections	7/5
	Obstructions to Overtaking	7/5
	Non-overtaking Crests	7/6
	Overtaking Value	7/7
	Horizontal Curve Design	7/9
	Vertical Curve Design	7/10
	Junction Strategy	7/10
	Changes in Carriageway Width	7/13
	Road Markings	7/14
	Existing Single Carriageway Improvements	7/14
	Staged Construction	7/15
8.	Dual Carriageways and Motorways	
	General Principles	8/1
	All Purpose Dual Carriageways	8/1
	Motorways	8/2

0. FOREWORD

Introduction

0.1 This Standard applies to both single and dual carriageway roads in both urban and rural areas. It shall be used to derive the Design Speed, and the appropriate values of geometric parameters for use in the design of the road alignment. It states the basic principles to be used for coordinating the various elements of the road design, which together form the three dimensional design of the road.

0.2 This Standard replaces completely the following documents which are hereby withdrawn:

TD 9/81 Highway Link Design

TD 9/81 Amendment No 1 dated January 1985

TD 9/81 Amendment No 2 dated March 1991

Layout of Roads in Rural Areas (and metric supplement)

Roads in Urban Areas 1966 (and metric supplement)

Motorway Design Memorandum (1962 et seq)

TA 28/82 Layout of Roads in Rural Areas
A guide to revisions 1982

TA 32/82 Roads in Urban Areas
Revisions subsequent to “A guide to revisions 1979”

TA 43/84 Highway Link Design

Previous “Chapter 5. Climbing Lanes” has been revised and Annexes B and C deleted.

0.3 Sections of the Advice Note TA 43/84, Highway Link Design, are superseded by the changes to this Standard itemised in Paragraph 0.6 of the Foreword. The Advice Note is hereby withdrawn pending a review of this Standard.

0.4 Parts of Chapter 6 and Table 4 were superseded by TD 20/85 “Traffic Flows and Carriageway Width Assessment” (DMRB 5.1). The superseded text has been removed from Chapter 6 and Table 4.

0.5 The format has been changed to that required for the Design Manual for Roads and Bridges (DMRB). The Paragraphs have therefore been renumbered. Except as noted in Paragraphs 0.6 and 07, the Standard is unchanged.

0.6 New material has been added to this edition of the standard updating the approach to be taken when considering the application of alignment parameter values less than Desirable Minimum. The following Paragraphs have been amended or added to reflect this and the changes identified in Paragraph 0.7:

0.3 0.4 0.5 0.6 0.7 0.8 0.14 0.15 0.16
1.9 1.12 to 1.25 inclusive
2.1 2.8 to 2.13 inclusive
3.3 3.4 to 3.6 inclusive
4.4 to 4.17 inclusive
Table 3

0.7 All parameters are now based upon Desirable Minimum values, except for Sag Curves which have not previously had Desirable Minimum values. Values below that are expressed in terms of numbers of Design Speed steps below Desirable Minimum. References to Absolute Minimum for other than Sag Curves have been deleted. Where existing Standards refer to Absolute Minimum values contained in this Standard, these shall be taken as one Design Speed step below Desirable Minimum values.

0.8 Certain editorial changes have been introduced to assist in the application of the Standards, but without changing the Standards.

Implementation

0.9 This Standard should be used forthwith for the design of all schemes for the construction and/or improvement of trunk roads currently being prepared provided that in the opinion of the Overseeing Department, this would not result in any significant expense or delay progress. Design Organisations should confirm its application to particular schemes with the Overseeing Department.

Scope

0.10 A major objective of this Standard is to ensure that designs achieve value for money without any significant effect on safety. The design systems that

have been developed in relation to both Design Speed and the related geometric parameters will result in a much greater flexibility to achieve economic design in difficult circumstances. In addition, detailed attention is given to the design of single carriageway roads, where the previous recommendations have been considerably extended to allow greater flexibility for design, with particular emphasis upon the coordination of design elements to improve safety and overtaking conditions. Overall, the greater flexibility for design introduced by this Standard will enable more economic design, reducing both the construction costs and the impact of new roads and road improvements on the environment.

0.11 Throughout this Standard, there is a continual reference to the use of the cost/benefit programme COBA (Scotland - NESA), which shall be used at all stages to test the economic performance of alternative scheme designs.

Interpretation

0.12 The Standards contained in this document represent the various criteria and maximum/minimum levels of provision whose incorporation in the road design would achieve a desirable level of performance in average conditions in terms of traffic safety, operation, economic and environmental effects. In most cases, with care, designs can be achieved which do not utilise the lowest levels of design parameters given. At some locations on new roads or major improvements, however, it may not be possible to justify even the lowest levels of design parameters in economic or environmental terms, due to high costs, low traffic levels, and environmental damage etc. In such cases, sufficient advantages might justify either a Relaxation within the Standards, or in more constrained locations a Departure from the Standards. The various parameters quoted in this Standard are not, therefore to be regarded as sacrosanct in all circumstances. Relaxations and Departures should be assessed in terms of their effects on the economic worth of the scheme, the environment, and the safety of the road user. Further details on the use of Relaxations are given in Chapters 1 to 4.

0.13 Designers should always have regard to the cost effectiveness of the design provision. In some cases, such as gradients, DMRB Volume 13.1 provides a method of quantifying the economic trade-offs associated with Relaxations. In others, the implications, particularly in relation to safety may not be quantifiable and the Designer must apply the judgement of experience in proposing a Relaxation or Departure.

0.14 When issued in 1981, this Standard introduced the concept of a hierarchy of permitted values for geometric layout parameters (visibility, horizontal curvature & vertical curvature). This hierarchy was based upon Desirable Minimum Standards, with lower values being known progressively as Relaxations and Departures. Values equal to or higher than Desirable Minimum give consistently safe alignments and minimise journey times. Research had shown that in many situations safety was no worse with values lower than the rigid requirements of the previous Standards. The hierarchy of values enabled a flexible approach to be applied where the strict application of Desirable Minimum requirements would lead to disproportionately high construction costs or severe environmental impact upon people, properties and landscapes. Successive levels in the hierarchy invoked more stringent consideration in line with the need to carefully consider safety.

0.15 During the years since 1981 there have been many advances in road layout design. The procedures for the assessment of safety and operational aspects have improved. Further research has strengthened the understanding of driver behaviour. Safety audits and other initiatives in the mechanics of assessing and checking scheme layouts have made the design process more rigorous and reliable.

0.16 Since 1981, experience has been gained in the application of this hierarchy of values and this experience indicates that the environmental and financial benefits gained from this increased flexibility can be considerable. Against this background, the scope for Relaxations has been increased to allow Designers to consider alignment parameter values that would generally be approved if they were put to the Overseeing Department as Departure proposals. The scope for Relaxations is increased by 1 Design Speed step for Motorways and 2 steps for All Purpose Roads, except for Sag Curves where the increase is 1 step for All Purpose Roads alone. The Designer is required to carefully consider the benefits and any potential disadvantages of Relaxations. New additional guidance is included in Chapter 1 describing the approach to be taken to assessing Relaxations. Relaxations are considered to conform to Standards.

0.17 In Wales additional Design Guidance is provided in the publications “Roads in Upland Areas: A Design Guide” and “Roads in Lowland Areas: A Design Guide”. These are to be treated as Relaxations which will be subject to the considerations described in Chapter 1 of this Standard.

1. DESIGN SPEED

General

1.1 The road alignment shall be designed so as to ensure that Standards of curvature, visibility, superelevation, etc. are provided for a Design Speed which shall be consistent with the anticipated vehicle speeds on the road. A relatively straight alignment in flat country will generate higher speeds, and thus produce a higher Design Speed than a more sinuous alignment perhaps located in hilly terrain, or amongst dense land use constraints. There is therefore always an inherent economic trade-off between the construction and environmental costs of alternative alignments of different Design Speeds, and their user benefits, which shall be tested by COBA (Scotland - NESA).

Factors Affecting Speed

1.2 Speeds vary according to the impression of constraint that the road alignment and layout impart to the driver. This constraint can be measured by the three factors given in Paragraphs 1.3 to 1.5.

1.3 Alignment Constraint Ac: This measures the degree of constraint imparted by the road alignment, and measured by:

Dual Carriageways: Ac = 6.6 + B/10

Single Carriageways:
Ac = 12 - VISI/60 + 2B/45

where:

B = Bendiness Degrees/km

VISI = Harmonic Mean Visibility m
(see Annex A).

1.4 Layout Constraint Lc: This measures the degree of constraint imparted by the road cross section, verge width, and frequency of junctions and accesses. Table 1 shows the values of Lc relative to cross section features and density of access, expressed as the total number of junctions,laybys and commercial accesses per km, summed for both sides of the road, where:

L = Low Access numbering 2 to 5 per km

M = Medium Access numbering 6 to 8 per km

H = High Access numbering 9 to 12 per km

Road Type	S2				WS2		D2AP		D3AP	D2M	D3M
Carriageway Width (Ex. Metre Strips)	6m		7.3m		10m		Dual 7.3m		Dual 11m	Dual 7.3m & Hard Shoulder	Dual 11m & Hard Shoulder
Degree of Access and Junctions	H	M	M	L	M	L	M	L	L	L	L
Standard Verge Width	29	26	23	21	19	17	10	9	6	4	0
1.5m Verge	31	28	25	23							
0.5m Verge	33	30									

There is no research data available for 4 lane Single Carriageway roads between 12 and 14.6m width (S4). In the limited cirumstances for their use descibed in this document, Design Speed should be estimated asuming a normal D2AP with a Layout Constraint of 15 - 13 kph

Table 1 Layout Constraint Lc kph

1.5 Mandatory Speed Limits: On rural derestricted roads, ie. with national speed limits of:

	mph	kph
Motorways and Dual Carriageways	70	112
Single Carriageways	60	96

vehicle speeds are constrained only by the physical impression of the road alignment, as described by Ac and Lc. The use of mandatory speed limits (together with more confined urban cross-sections) however, restricts speeds below those freely achievable, and will act as a further constraint on speed in addition to that indicated by Lc.

Selection of Design Speed

1.6 New Rural Roads: Design Speed shall be derived from Figure 1, which shows the variation in speeds for a given Lc against Ac. The Design Speeds are arranged in bands, ie. 120, 100, 85, etc., within which suffixes A and B indicate the higher and lower categories of each band. An initial alignment to a trial Design Speed should be drawn up, and Ac measured for each section of the route demonstrating significant changes thereof, over a minimum length of 2 km. The Design Speed calculated from the ensuing Ac and Lc should be checked against the initial choice to identify locations where elements of the initial trial alignment may be relaxed to achieve cost or environmental savings, or conversely where design should be upgraded, according to the calculated Design Speed. If any changes to road geometry result, then the Design Speed should be recalculated to check that it has not changed.

1.7 Existing Rural Road Improvements: (including short diversions or bypasses up to about 2 km in length) Design Speed shall be derived in a similar manner to Paragraph 1.6 above, with Ac measured over a minimum length of 2 km incorporating the improvement, provided there are no discontinuities such as roundabouts. The strategy for the contiguous sections of road, however, must be considered when determining Ac and the cross-sectional design. It might be unnecessary to provide a full Standard cross-section for a minor re-alignment within a low Standard route, unless it represented a stage of a realistic improvement strategy.

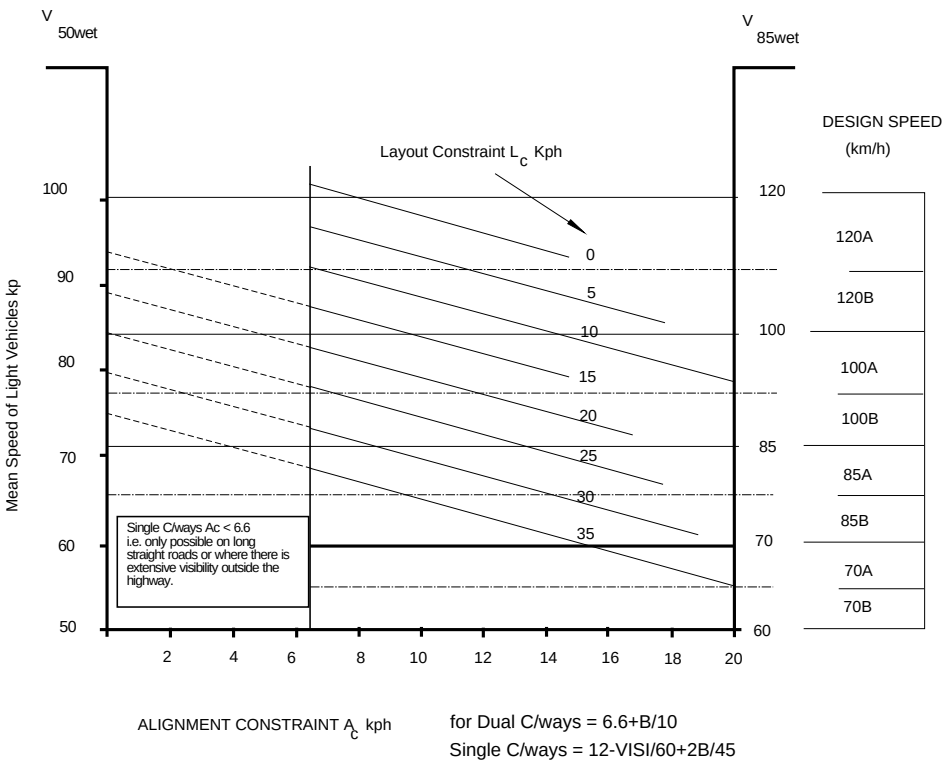

Figure 1 Selection of Design Speed (Rural Roads)

1.8 Urban Roads: Low speed limits (30-40 mph) may be required due to the amount of frontage activity, but also where physical restrictions on the alignment make it impractical to achieve geometry relative to a higher Design Speed. Design Speeds shall be selected with reference to the speed limits envisaged for the road, so as to permit a small margin for speeds in excess of the speed limit, as shown in Table 2. The minimum Design Speed for a primary distributor shall be 70A kph.

SPEED LIMIT		DESIGN SPEED
MPH	KPH	KPH
30	48	60B
40	64	70A
50	80	85A
60	96	100A

Table 2

Design Speed Related Parameters

1.9 The Design Speed bands 120, 100, 85 kph, etc dictate the minimum geometric parameters for the design, according to Table 3, which shows Desirable Minimum (Absolute Minimum For Sag Curves only) values and values for certain Design Speed steps below Desirable Minimum. Desirable Minimum values represent the comfortable values dictated by the Design Speed.

DESIGN SPEED kph	120	100	85	70	60	50	V^2/R
STOPPING SIGHT DISTANCE m							
Desirable Minimum	295	215	160	120	90	70	
One Step below Desirable Minimum	215	160	120	90	70	50	
HORIZONTAL CURVATURE m.							
Minimum R* without elimination of Adverse Camber and Transitions	2880	2040	1440	1020	720	520	5
Minimum R* with Superelevation of 2.5%	2040	1440	1020	720	510	360	7.07
Minimum R* with Superelevation of 3.5%	1440	1020	720	510	360	255	10
Desirable Minimum R with Superelevation of 5%	1020	720	510	360	255	180	14.14
One Step below Desirable Minimum R with Superelevation of 7%	720	510	360	255	180	127	20
Two Steps below Desirable Minimum Radius with Superelevation of 7%	510	360	255	180	127	90	28.28
VERTICAL CURVATURE							
Desirable Minimum* Crest K Value	182	100	55	30	17	10	
One Step below Desirable Min Crest K Value	100	55	30	17	10	6.5	
Absolute Minimum Sag K Value	37	26	20	20	13	9	
OVERTAKING SIGHT DISTANCES							
Full Overtaking Sight Distance FOSD m.	*	580	490	410	345	290	
FOSD Overtaking Crest K Value	*	400	285	200	142	100	

Table 3

* Not recommended for use in the design of single carriageways (see Paragraphs 7.25 to 7.31 inclusive)

The V^2/R values shown in Table 3 above simply represent a convenient means of identifying the relative levels of design parameters, irrespective of Design Speed.

Changeover of Design Speed Standards

1.10 Transitions between sections with different Design Speeds shall be carefully designed so as not to present the driver suddenly with low radius curves, shorter sight distances etc. Where an alignment changes from a higher to a lower Design Speed, Relaxations should be avoided adjacent to the interface on the length of road with the lower Design Speed.

Connection to Existing Roads

1.11 Care shall be taken where an improved section rejoins an existing road, that the existing Standard of curvature and sight distance at the interface shall be subject to the same restrictions as would be relevant for the Design Speed of the improvement. Figure 2 shows the connection of an improvement to an existing road. Care must be taken that the curvature and sight distance at C is adequate for the approach Design Speed which has increased due to the improvement between A and B.

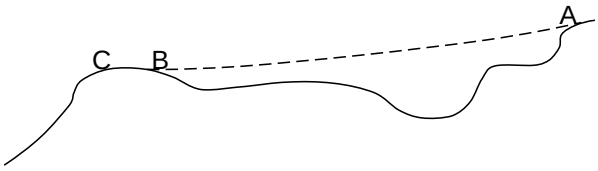

Figure 2

Selection of Parameter Values

1.12 Designers should normally aim to achieve at least Desirable Minimum values for stopping sight distance, horizontal curvature and vertical crest curvature. For sag curves, Designers should normally aim to achieve at least Absolute Minimum values. For single carriageways there are certain horizontal and vertical curve values which although exceeding the Desirable Minimum values are not recommended. See Paragraphs 7.25 to 7.31 inclusive.

1.13 Numerous accident studies have been carried out, both in this country and abroad, and it has always proved difficult to correlate accident rates with causal factors. The reason is that an accident is a rare, random event where people have failed to cope with the situation; often exacerbated by one or more influences from a large selection of contributory factors. Serious injury accidents are rarer still, with the majority being primarily attributable to driver error. It is estimated that road layout is a main contributory factor in only a small proportion of injury accidents, indicating that accident rates are unlikely to be significantly affected by small or even moderate reductions in design parameters.

1.14 Studies carried out on rural all-purpose roads for the development of this Standard aimed to correlate personal injury accident rates with horizontal curvature, gradient, and sight distance. Results were consistent with those of other studies, showing that values of these layout parameters below Desirable Minimum values were associated with slightly increased accident rates, and the increase did not become significant until the difference from the Desirable value was considerable. Further, the effects of these elements in combination were found to be best represented by accumulating the separate effects. Individual results were widely scattered, showing that specific sites might not always follow the general trend, and reflecting the influence of factors other than road layout.

Relaxations

1.15 This Standard defines a sequence of parameter values in the form of a hierarchy of geometric design criteria related to Design Speeds. This three tier hierarchy enables a flexible approach to be applied to a range of situations where the strict application of Desirable Minimum Standards would lead to disproportionately high construction costs or severe environmental impact upon people, properties or landscapes. Designs with at least Desirable Minimum Standards will produce a high standard of road safety and should be the initial objective. However, the level of service may remain generally satisfactory and a road may not become unsafe where these values are reduced. This second tier of the hierarchy is termed a Relaxation.

1.16 The limit for Relaxations is defined by a given number of Design Speed steps below a specific bench mark, usually the Desirable Minimum. Relaxations vary according to the type of road - motorway or all-purpose, and whether the Design Speed is band A or band B. Details for sight distance are given in Chapter 2, for horizontal alignment in Chapter 3, and for vertical alignment in Chapter 4.

1.17 Relaxations may be introduced at the discretion of the Designer, having regard to the advice given in this document and all the relevant local factors. Careful consideration must be given to layout options incorporating Relaxations, having weighed the benefits and any potential disbenefits. Particular attention should be given to the safety aspects and the environmental

and/or cost benefits which would result from the use of Relaxations. The consideration process should be recorded. The preferred option should be compared against options that would meet Desirable Minimum Standards.

1.18 A number of layout options might be feasible for a scheme, with each containing Relaxations. This Standard gives examples of locations where some options can be expected to be safer than others. For example, providing Desirable Minimum Stopping Sight Distance to a junction, at the expense of less than desirable values of horizontal or vertical curvature at a location away from that junction. The Relaxation then becomes isolated in that only one feature is below desirable value on a given length of road, and that length does not contain the complication of a junction. In this manner the accident potential of a constrained alignment has been minimised by applying layout design principles based upon the knowledge currently available.

1.19 A list of principles to follow when preparing options that include Relaxations is as follows. It is equally a list of factors to be taken into account when considering the merits of options.

1.20 The Designer should consider whether, and to what degree the site is:

- isolated from other Relaxations
- isolated from junctions
- one where drivers have Desirable Minimum Stopping Sight Distance
- subject to momentary visibility impairment only
- one that would affect only a small proportion of the traffic
- on straightforward geometry readily understandable to drivers
- on a road with no frontage access
- one where traffic speeds would be reduced locally due to adjacent road geometry (eg uphill sections, approaching roundabouts and major/minor junctions where traffic has to give way or stop, etc), or speed limits

1.21 The Designer should also consider whether the following should be introduced in conjunction with any Relaxation:

- accident prevention measures (eg safety fencing, increased skidding resistance etc.)
- Warning signs and road markings to alert the driver to the layout ahead.

1.22 The Designer should have regard to the traffic flows carried by the link. High flows may carry a greater risk of queues & standing traffic approaching junctions in the peak period. Conversely lower flows might encourage higher speeds.

1.23 Values for sight distance, horizontal curvature and vertical curvature shall not be less than those given in Table 3 for 50kph Design Speed.

1.24 Only stopping sight sistance, horizontal curvature, vertical curvature, and superelevation shall be subject to Relaxations. Stopping sight distance Relaxations of up to 1 Design Speed step below Desirable Minimum may be coincident with horizontal curvature Relaxations of up to 1 design Speed step below Desirable Minimum. All other combinations of Relaxations are not permitted and shall be treated as Departures.

1.25 Relaxations are not permitted for either of the overtaking sight distance parameters given in Table 3

1.26 The Relaxations below Desirable Minimum in stopping sight distance and vertical curvature for crest curves and Absolute Minimum for sag curves described in Paragraphs 2.8 to 2.13 inclusive and 4.9 to 4.17 inclusive are **NOT** permitted on the immediate approaches to junctions, because the majority of accidents occur in the vicinity of junctions.
For the purposes of this Standard the immediate approaches to a junction shall be:

a. For at grade major/minor junctions without diverge and merge tapers, those lengths of carriageway on the minor roads between a point 1.5 times the Desirable Minimum Stopping Sight Distance upstream of the Stop line or Give Way line and the Stop line or Give Way line itself, and those lengths of carriageway on the mainline between a point 1.5 times the Desirable Minimum Stopping Sight Distance from the centre line of the minor road and the centre line itself.

b. For roundabouts, those lengths of carriageway on the approach to the roundabout between a 1.5 times the Desirable Minimum Stopping Sight Distance from the Give Way line and the Give Way line itself.

c. For diverges, that length of carriageway from a point 1.5 times the Desirable Minimum Stopping Sight Distance upstream of the start of the diverge taper to the back of the diverge nose.

d. For merges, that length of carriageway from a point 1.5 times the Desirable Minimum Stopping Sight Distance upstream of the back of the merge nose to the end of the merge taper.

Departures

1.27 In situations of exceptional difficulty which cannot be overcome by Relaxations, it may be possible to overcome them by adoption of Departures, the third tier of the hierarchy. Proposals to adopt Departures from Standard must be submitted to the Overseeing Department for approval before incorporation into a design layout to ensure that safety is not significantly reduced.

1.28 Where a scheme will create more than 2km of WS2 road (Categories 3B & 4, Table 4) then the approval of the Overseeing Department is required.

2. SIGHT DISTANCE

Stopping Sight Distance

2.1 Table 3 shows the stopping sight distance (SSD) appropriate for each Design Speed.

2.2 Stopping sight distance shall be measured from a minimum driver's eye height of between 1.05m and 2.00m, to an object height of between 0.26m and 2.00m both above the road surface, as shown in Figure 3. It shall be checked in both the horizontal and vertical plane, between any two points in the centre of the lane on the inside of the curve (for each carriageway in the case of dual carriageways).

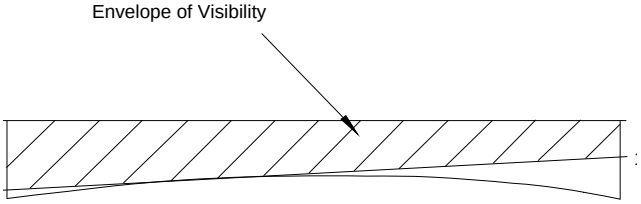

Figure 3 Measurement of Stopping Sight Distance

Full Overtaking Sight Distance

2.3 Table 3, shows for each Design Speed the Full Overtaking Sight Distance (FOSD) required for overtaking vehicles using the opposing traffic lane on single carriageway roads. Sufficient visibility for overtaking shall be provided on as much of the road as possible, especially where daily traffic flows are expected to approach the maximum design flows.

2.4 FOSD shall be available between points 1.05m and 2.00m above the centre of the carriageway as shown in Figure 4, and shall be checked in both the horizontal and vertical planes.

2.5 FOSD is considerably greater than stopping sight distance, and can normally only be economically provided in relatively flat terrain where the combination of vertical and horizontal alignment permits the design of a flat and relatively straight road alignment.

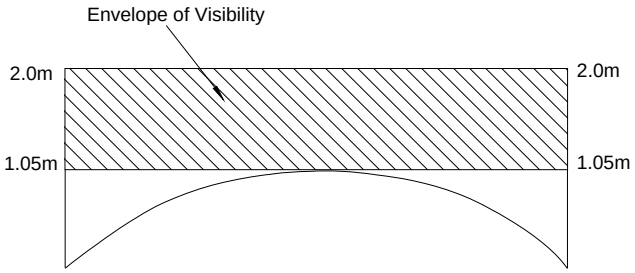

Figure 4 Measurement of FOSD

Coordinated Design of Single Carriageways:

2.6 It will frequently be more economic to design a single carriageway road so as to provide clearly identifiable Overtaking Sections with FOSD in relatively level areas, with climbing lanes at hills, interspersed with Non-overtaking Sections where constraints on the alignment would result in high cost or environmental implications. The detailed Standards and design considerations regarding the coordinated design of such links are given in Chapter 6 to Chapter 8 inclusive. Designs which provide the driver with obvious lengths for overtaking have been found to reduce the frequency of serious accidents occurring on roads with continuous large radius curves. On the other hand, in some conditions in flat topography speeds may be somewhat reduced. There is therefore always an inherent economic trade-off between the construction and environmental costs of alternative alignments and their user benefits, which shall be tested by COBA (Scotland - NESA).

Obstructions to Sight Distance

2.7 Care shall be taken to ensure that no substantial fixed obstructions obstruct the sightlines including road furniture such as traffic signs. However, isolated slim objects such as lamp columns, sign supports, or slim footbridge supports of width 550mm or under can be ignored. Similarly, the effect of short intermittent obstructions, such as bridge parapets of minor roads under, can be ignored. Lay-bys should, wherever possible, be sited on straights or on the outside of curves, where stopped vehicles will not obstruct sightlines.

Relaxations

2.8 In the circumstances described in Paragraphs 1.15 to 1.26, Relaxations below the Desirable Minimum Stopping Sight Distance values may be made at the discretion of the Designer. The number of Design Speed steps permitted below the Desirable Minimum are normally as follows:

motorways	band A	1 step
motorways	band B	2 steps
all-purpose	band A	2 steps
all-purpose	band B	3 steps

However, in the circumstances listed in Paragraphs 2.9, 2.10, 2.11, and 2.12, the scope for Relaxations shall be extended or reduced as described.

2.9 For all band A roads where the stopping sight distance is reduced by bridge piers, bridge abutments, lighting columns, supports for gantries and traffic signs in the verge or central reserve which form momentary obstructions, the scope for Relaxations may be extended by 1 Design Speed step.

2.10 Long bridge parapets or safety fences or safety barriers on horizontal curves may obscure stopping sight distance to the 0.26m object height, although the appropriate sight distance to the tops of other vehicles, represented by the 1.05m object height, will be obtained above the parapet or safety fence or safety barrier. For band A roads where the appropriate stopping sight distance to the high object is available in this way, the scope for Relaxation of stopping sight distance for sight lines passing in front of the obstruction to the 0.26m object height may be extended by one Design Speed step.

2.11 On or near the bottom of long grades on dual carriageways steeper than 3% and longer than 1.5km the scope for Relaxations shall be reduced by 1 Design Speed step. Conversely, at or near the top of up gradients on single carriageways steeper than 4% and longer than 1.5 km, the scope for Relaxation may be extended by 1 step due to reduced speeds uphill.

2.12 The scope for Relaxations shall be reduced by 1 Design Speed step immediately following an Overtaking Section on single carriageway roads (see Paragraphs 7.5 to 7.16).

2.13 Relaxations below Desirable Minimum are not permitted on the immediate approaches to junctions as defined in Paragraph 1.26.

3. HORIZONTAL ALIGNMENT

Road Camber

3.1 On sections of road with radii greater than that shown in Table 3, (Minimum R without elimination of adverse camber & transitions), (ie $V^2/R < 5$) the crossfall or camber should be 2.5% from the centre of single carriageways, or from the central reserve of dual carriageways to the outer channels. At junctions other than roundabouts, the cross-section of the major road shall be retained across the junction, and the side road graded into the channel line of the major road. On horizontal curves, adverse camber shall be replaced by favourable crossfall of 2.5% when the radius is less than that shown in Table 3, (Minimum R without elimination of adverse camber & transitions), (ie $V^2/R > 5$). However, it will frequently be necessary to eliminate adverse camber on larger radii for aesthetic or drainage reasons.

Superelevation

3.2 On radii less than those shown in Table 3, (Minimum R with superelevation of 5%), (ie. $V^2/r > 7$) superelevation shall be provided, such that:

$$S = \frac{V^2}{2.828 \times R}$$

Where :

V = Design Speed kph

R = Radius of Curve m.

S = Superelevation %.

In rural areas superelevation shall not exceed 7%

In urban areas with at-grade junctions and side accesses, superelevation shall be limited to 5%.

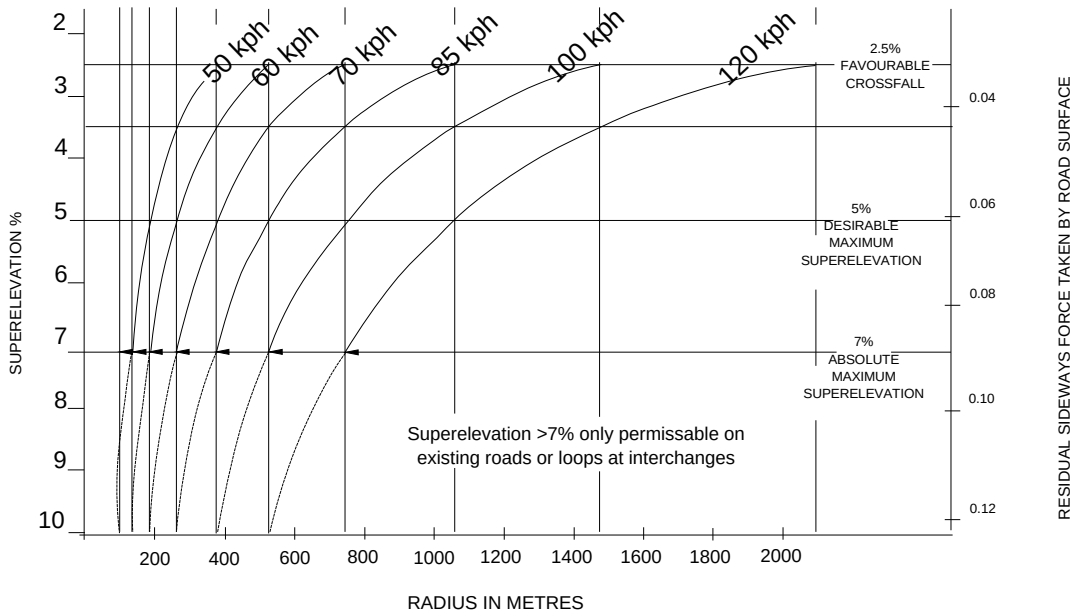

Figure 5 Superelevation of Curves

Figure 5 shows the appropriate superelevation for the range of Design Speeds. Sharper radii than the Desirable Minimum shown in Table 3 result in steep crossfalls which should be avoided if possible. It is essential to maintain adequate skidding resistance and good drainage at all superelevations in accordance with the Overseeing Department's current criteria.

Desirable Minimum Radius

3.3 The Desirable Minimum radii, corresponding with superelevation of 5% and radii below Desirable Minimum with superelevation of 7% are shown in Table 3 (ie V^2/R > 14 Desirable, 20 Absolute Maximum).

Relaxations

3.4 In the circumstances described in Paragraphs 1.16 to 1.26, Relaxations below the Desirable Minimum values may be made at the discretion of the Designer. The number of Design Speed steps permitted below the Desirable Minimum are normally as follows:-

motorways	band A	2 step
motorways	band B	3 steps
all-purpose	band A	3 steps
all-purpose	band B	4 steps

However, for all roads in Design Speed band B in the circumstances listed in Paragraphs 3.5 and 3.6, the scope for Relaxations shall be extended or reduced as described.

3.5 On or near the bottom of long grades on dual carriageways steeper than 3% and longer than 1.5km the scope for Relaxations shall be reduced by 1 Design Speed step. Conversely, at or near the top of up gradients on single carriageways steeper than 4% and longer than 1.5 km, the scope for Relaxations may be extended by 1 step due to reduced speeds uphill.

3.6 The scope for Relaxations shall be reduced by 1 Design Speed step immediately following an Overtaking Section on single carriageway roads (see Paragraphs 7.5 to 7.16).

Appearance and Drainage

3.7 Superelevation shall not be introduced, nor adverse camber removed, so gradually as to create large almost flat areas of carriageway, nor so sharply as to cause discomfort or to kink the edges of the carriageway. A satisfactory appearance can usually be achieved by ensuring that the carriageway edge profile does not vary in grade by more than about 1% from that of the line about which the carriageway is pivoted, and by ample smoothing of all changes in edge profile. In general on motorways, a smoother edge profile should be provided by reducing the variation in grade of the edge profile to a maximum of 0.5% where feasible, ie where local drainage conditions permit, and care should be taken to ensure that a minimum longitudinal gradient of at least 0.5% is maintained wherever superelevation is to be applied or reversed. However, in some difficult areas even the above requirements can lead to drainage problems, eg where the superelevation is applied against the longitudinal gradient. It may be necessary to either modify the horizontal alignment to move the superelevation area, increase the variation in grade of the edge profile, or apply a rolling crown. Areas susceptible to such drainage problems should be identified at an early stage in the design process, before the horizontal alignment is fixed.

Application of Superelevation

3.8 Progressive superelevation or removal of adverse camber shall be achieved over or within the length of the transition curve from the arc end. On existing roads without transitions, between ½ and ⅔ of the cant shall be introduced on the approach straight and the remainder at the beginning of the curve.

Widening on Curves

3.9 Widening of curves on links and on the main line through junctions is required for carriageways of less than standard width and for low radius curves of standard width to allow for the swept path of long vehicles.

3.10 For Carriageways of Standard Width, (7.3m, 11m, and 14.6m for 2, 3 or 4 lanes respectively), an increase of 0.3m per lane shall be allowed when the radius is between 90m and 150m. Two lane roads of width greater than 7.9m require no additional widening.

3.11 For Carriageways less than the Standard Widths, widening shall be:

0.6m per lane where the radius is between 90m and 150m subject to maximum carriageway widths of 7.9m, 11.9m and 15.8m (for 2, 3 and 4 lanes respectively).

0.5m per lane where the radius is between 150m and 300m, subject to a maximum width not greater than the standard width in Paragraph 3.10 above.

0.3m per lane, where the radius is between 300m and 400m subject to a maximum width not greater than the standard width in Paragraph 3.10 above.

3.12 Radii less than 90m on the mainline are Departures from standard. For these and all other junction elements, widening should be in accordance with TA 20 (DMRB 6.2).

3.13 The extra width should be applied uniformly along the transition curve. In the improvement of existing curves the widening should generally be made on the inside of curves.

Lane Width Reductions at Pinch Points:

3.14 At points of particular difficulty on new dual carriageways, where full lane widths cannot be achieved, a reduction from 3.65m to 3.50m is permitted provided that the radius of curvature exceeds 1000m. Points where such a relaxation are likely to be most applicable are around the urban fringe, and at sites with difficult topography or in historic or conservation areas. This relaxation shall not apply on new single carriageway roads.

Transitions

3.15 Transition curves shall be provided on curves the radius of which are less than that shown in Table 3, Minimum R without elimination of adverse camber & transitions.

3.16 Length of Curve:
The basic transition length shall be derived from the formula:

$$L = \frac{V^3}{46.7 \times q \times R}$$

Where:

L = Length of transition (m)
V = Design Speed (kph)
q = Rate of increase of centripetal acceleration (m/sec^3) travelling along curve at constant speed V(kph)
R = Radius of curve (m)

q should normally not exceed 0.3 m/sec^3, although in difficult cases, it may be necessary to increase the value up to 0.6 m/sec^3. On bends (sub-Standard curves for the appropriate Design Speed) the length of transition should normally be limited to $\sqrt{(24R)}$ metres.

3.17 Application of Superelevation: Superelevation or elimination of adverse camber shall generally be applied on or within the length of the transition curve from the arc end. The basic transition appropriate to the Design Speed however will often result in insufficient transition length to accommodate superelevation turnover, and it will therefore be necessary to provide longer transitions to match the superelevation design.

The Effect of Sight Distance at Horizontal Curves

3.18 Stopping Sight Distance: When the road is in a cutting, or at bridge crossings, it will be necessary to widen verges or increase bridge clearances to ensure that the appropriate stopping sight distance is not obstructed. Figure 6 shows the maximum central offset required with varying horizontal curvature, in order to maintain the Design Speed related stopping sight distances. It can be seen that extensive widening of verges and structures, or central reserves with safety fence or safety barriers, would be required to maintain Desirable Stopping Sight Distances on horizontal radii below Desirable Minimum. Where a road is on embankment, however, visibility will be available across the embankment slope, and in such cases it is environmentally desirable to permit beneficial usage of the land by granting a licence to adjoining landowners under Section 142, Highways Act, 1980. (Scotland: Section 50, Roads Scotland Act 1984.)

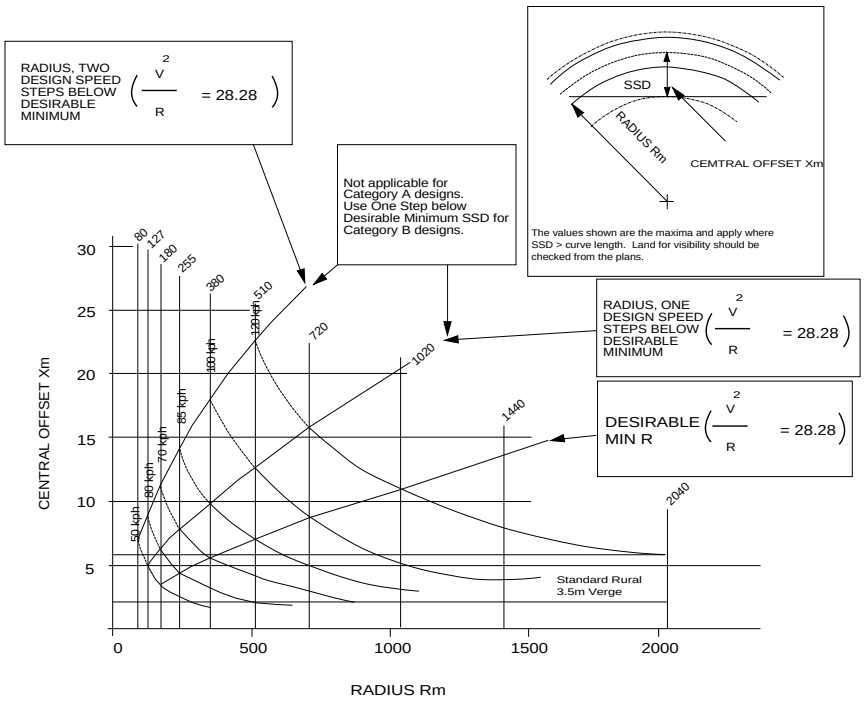

Figure 6 Verge Widening for Desirable Minimum Stopping Sight Distance

3.19 Full Overtaking Sight Distance: Figure 7 shows the maximum central offset required with varying horizontal curvature, in order to maintain the Design Speed related FOSD's. It can be seen that the higher requirements of FOSD result in extensive widening of verges for all but relatively straight sections of road, and in such cases it is environmentally desirable to permit beneficial usage of the land by granting a licence to adjoining landowners under Section 142, Highways Act, 1980. (Scotland: Section 50, Roads Scotland Act 1984).

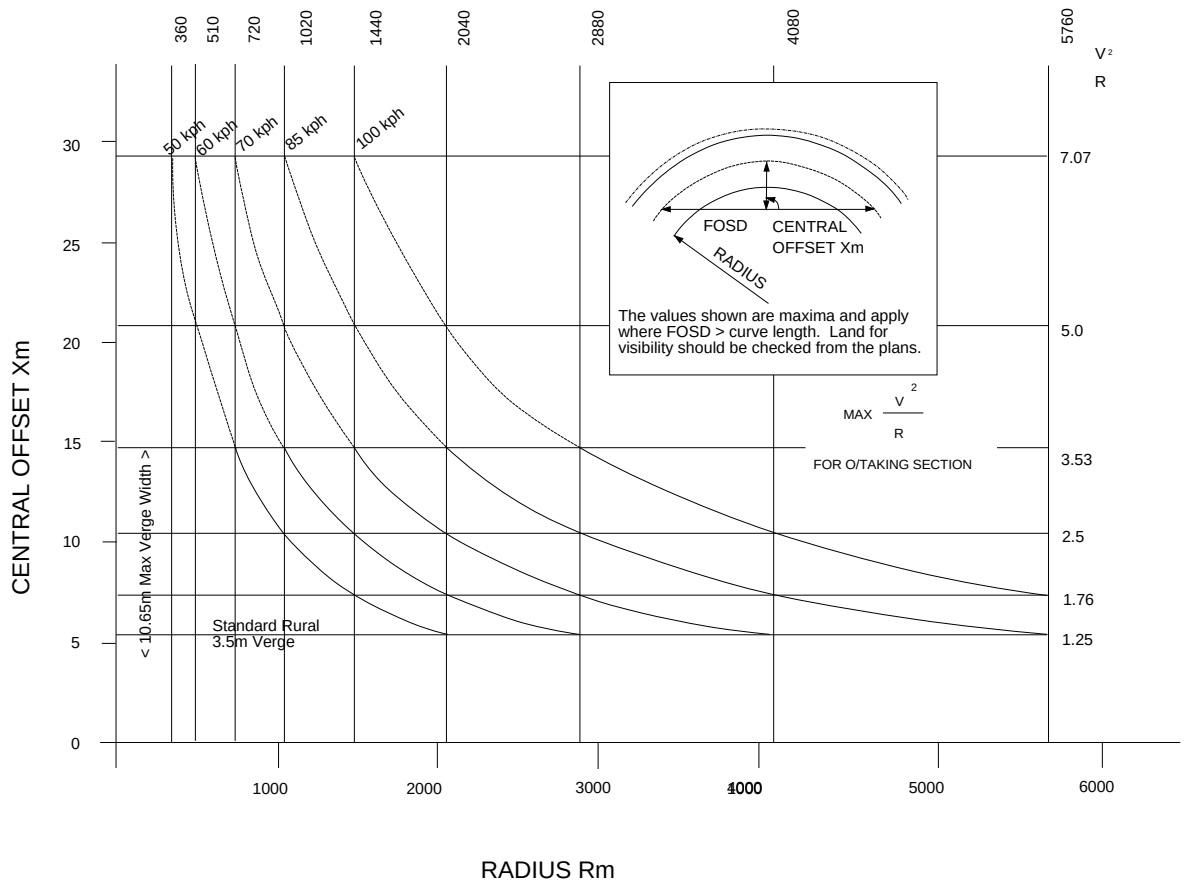

Figure 7 Verge Widening for FOSD

4. VERTICAL ALIGNMENT

Gradients

4.1 Maximum Gradients: The desirable maximum gradient for design shall be:

	Desirable Max Grade
Motorways	3%
AP Dual Carriageways	4%
AP Single Carriageways	6%

However, in hilly terrain steeper gradients will frequently be required, particularly where traffic volumes are at the lower end of the range.

4.2 Effects of Steep Gradients: In hilly terrain the adoption of gradients steeper than Desirable Maximum could make significant savings in construction or environmental costs, but would also result in higher user costs, ie by delays, fuel and accidents. Whilst on motorways the disbenefits associated with the consequently high traffic volumes indicate that 4% gradient should normally be regarded as the Absolute Maximum, on all purpose roads an economic assessment of the effects of adopting a steeper gradient should be carried out to determine the economic trade-off between construction/environmental cost savings and disbenefits to traffic (as shown in Annex 2). There is, however, a progressive decrease in safety with increasingly steeper gradients, and gradients steeper than 8% shall be considered as Departures from Standards.

4.3 Minimum Gradients: For effective drainage with kerbed roads a minimum gradient of 0.5% should be maintained wherever possible. In flatter areas, however, the vertical alignment should not be manipulated by the introduction of vertical curvature simply to achieve adequate surface water drainage gradients. Drainage paths must be provided by false channel profiles with minimum gradients of 0.5%. False channels may be avoided by using over-edge drainage (to filter drains or surface channels or ditches) where kerbs are inappropriate, eg in rural areas.

Vertical Curves

4.4 General: Vertical curves shall be provided at all changes in gradient. The curvature shall be large enough to provide for comfort and, where appropriate, stopping sight distances for safe stopping at Design Speed. The use of the permitted vertical curve parameters will normally meet the requirements of visibility, however stopping sight distance should always be checked because the horizontal alignment of the road, presence of crossfall, superelevation or verge treatment and features such as signs and structures adjacent to the carriageway will affect the interaction between vertical curvature and visibility.

4.5 K Values: Curvature shall be derived from the appropriate K value in Table 3. The minimum curve lengths can be determined by multiplying the K values shown by the algebraic change of gradient expressed as a percentage, ie +3% grade to -2% grade indicates a grade change of 5%. Thus for a Design Speed of 120 kph, the length of a crest curve would be:

Desirable Min = 5 x 182 = 910m
Absolute Min = 5 x 105 = 525m

4.6 Crest Curves: There are two factors that affect the choice of crest curvature, visibility and comfort. At Design Speeds of 50 kph and above the crest in the road will restrict forward visibility to the Desirable Minimum Stopping Sight Distance before minimum comfort criteria are approached, and consequently Desirable Minimum crest curves are based upon visibility criteria.

4.7 Sag Curves: Visibility at sag curves is usually not obstructed unless overbridges, signs or other features are present. For these curves, comfort criteria apply. (0.3 m/sec² maximum rate of vertical acceleration). However, for Design Speeds of 70 kph and below in unlit areas,shallower curves are necessary to ensure that headlamps illuminate the road surface for a stopping sight distance which is not more than one Design Speed step below Desirable Minimum Stopping Sight Distance. Sag curves should normally be designed to the Absolute Minimum k values in Table 3.

4.8 Grass Verges Where, at crests, the sight line crosses the verge, consideration shall be given to the design of a lower verge profile in order to allow for an overall height of grass of 0.5m.

Relaxations

4.9 Crest curves In the circumstances described in Paragraphs 1.15 to 1.26, Relaxations below the Desirable Minimum values may be made at the discretion of the Designer. The number of Design Speed steps permitted below the Desirable Minimum are normally as follows:

motorways	band A	1 step
motorways	band B	2 steps
all-purpose	band A	2 steps
all-purpose	band B	3 steps

However, in the circumstances listed in Paragraphs 4.10, 4.11 and 4.12 the scope for Relaxations shall be extended or reduced as described.

4.10 At or near the top of up gradients on single carriageways steeper than 4% and longer than 1.5 km, the scope for Relaxations may be extended by 1 step due to reduced speeds uphill.

4.11 The scope for Relaxations shall be reduced by 1 Design Speed step immediately following an Overtaking Section on single carriageway roads (see Paragraphs 7.5 to 7.16).

4.12 For band A roads when the crest curve is within a straight section the scope for Relaxations may be extended by 1 Design Speed step.

4.13 Relaxations below Desirable Minimum are not permitted on the immediate approaches to junctions as defined in Paragraph 1.26.

4.14 Sag curves In the circumstances described in Paragraphs 1.15 to 1.26, Relaxations below the Absolute Minimum values may be made at the discretion of the Designer. The number of Design Speed steps permitted below the absolute minimum are normally as follows:

motorways		none
all-purpose	all others	1 step
all-purpose	50B, 60B, 70B	2 steps

However, in the circumstances listed in Paragraphs 4.15 and 4.16, the scope for Relaxations shall be extended or reduced as described.

4.15 For Design Speeds of 70kph and less where the road is illuminated, the scope for Relaxations may be extended by one Design Speed step.

4.16 For roads in Design Speed bands 50B, 60B and 70B the scope for Relaxations shall be reduced by 1 Design Speed step immediately following an Overtaking Section on single carriageway roads (see Paragraphs 7.5 to 7.16).

4.17 Relaxations below Desirable Minimum are not permitted on the immediate approaches to junctions as defined in Paragraph 1.26.

5. CLIMBING LANES

INTRODUCTION

5.1 Scope: This chapter outlines the design principles and other factors which should be considered by designers for the introduction of climbing lanes into an existing carriageway or new build situation. The process of design is described below together with an approach to assessing the viability of the climbing lane.

5.2 General: This chapter replaces the existing Chapter 5 of TD 9/93. It provides clarification and is an extension of layout advice given in the previous document. In particular, amended advice is given for the use of climbing lanes on single carriageways, which has been revised following a safety review into the operation of climbing lanes. Other major changes are as follows:

- The assessment procedures and definitions have been updated and extended.
- Annex B (Economic Implications of Steep Gradients on Single Carriageways) and Annex C (Climbing Lanes for All Purpose Dual Carriageways and Motorways Economic Appraisal Method) in the previous standard have been superseded by the assessment procedures contained in DMRB Volumes 13 and 14.
- The presentation has been improved with new tables and additional figures.
- Additional layouts illustrating the use of climbing lanes commencing and terminating at roundabouts are included.
- Advice on road markings has been clarified and extended (see Chapter 5 of Traffic Signs Manual for guidance on road markings).

5.3 Implementation: This chapter should be used for the design, assessment and construction of all trunk road schemes including improvements to the existing trunk road network. The exceptions are schemes currently being prepared where application of this chapter would result in significant delays or costs.

5.4 Appraisal: This chapter highlights the potential impacts of climbing lanes in relation to the five Government objectives for transport (see paragraph 5.6).

SCHEME APPRAISAL

5.5 Introduction: In considering the need for a climbing lane, assessment, consultation and design must be an iterative process and should consider the appropriateness and significance of impacts measured against the scheme objectives. The design should take account of Standards, the Traffic Signs Regulations and General Directions, the Traffic Signs Manual and other DTLR publications.

5.6 Particular emphasis should be attached to the multi-modal appraisal objectives listed below, that should be carried out in accordance with the overseeing organisation's current procedures and to measures that benefit local communities, whether by improving safety and accessibility, or enhancing the environment.

- Safety (reduction in accidents).
- Environment (reduction in environmental intrusion, driver frustration, noise and air pollution).
- Economy (reduction in travel times, vehicle operating costs and journey time reliability).
- Accessibility (climbing lanes are unlikely to have any measurable impacts).
- Transport Integration (climbing lanes are unlikely to have any measurable impacts).

5.7 In preparing a design for a climbing lane section, the following 'scheme development' procedures should be adopted:

1. Identify the problem.
2. Prepare the scheme brief.
3. Assess the impacts within the framework provided by the five transport objectives of Safety, Economy, Environmental Impact, Integration and Accessibility.
4. Consider requirements for value engineering and scheme appraisal.

In situations where a climbing lane is added to an existing carriageway, data should be collected and "Before" surveys carried out if necessary.

5.8 Definitions: For the purposes of this document, a climbing lane is defined as an additional lane added to a single or dual carriageway in order to improve capacity and/or safety because of the presence of the steep gradient. The steep gradient is the primary reason for adding a lane. A climbing lane may be inserted into the carriageway by means of entry and exit tapers. In these cases the climbing lane should be a continuation of the near side lane with widening to the right so that overtaking traffic has to merge into the slower moving traffic at the termination points. Alternatively, a climbing lane may be inserted into a carriageway at a roundabout, simplifying the layout of a change in carriageway width.

5.9 On **single carriageways**, a climbing lane can be considered if it can be justified (see paras 5.11 to 5.27) on hills with gradients greater than 2% and longer than 500m.

5.10 On **dual carriageways**, gradients of 3% over a distance of 500m would be expected to be the minimum that would justify an additional lane.

5.11 Assessment of Impacts: The provision of an additional lane on an uphill section of a single or dual carriageway should provide benefits to travellers by diminishing delays caused by slow-moving traffic. The effect of adding a lane is two-fold; some traffic is able to move over to a faster lane, thereby gaining a significant speed advantage, and the consequent reduction of traffic in the left hand lane could enable speeds to increase in these slower lanes. Gradients can be pinch points, particularly on dual carriageways, where congestion starts when traffic flows approach capacity. On roads where design year flows are high the economic benefits can be substantial. On single carriageways, the economic benefits are likely to be less substantial but the climbing lane can also be viewed as a safety measure, by creating a safer overtaking environment and by reducing driver frustration.

5.12 Economy: The procedure for economic appraisal shall be based upon the guidance provided in DMRB Volume 13 (Economic Assessment of Road Schemes, Part 5, Paragraph 2.15 for single carriageways and Paragraph 3.13 for dual carriageways). This provides a means within COBA of modelling the economic benefits accruing through the introduction of a section of climbing lane. The Do Something (climbing lane) can be measured against the Do Nothing (no climbing lane) as well as an assessment of alternative climbing lane length and slope configurations. In Scotland NESA (DMRB Volume 15) is used in place of COBA. Guidance on climbing lanes is given in DMRB Volume 15, Part 7, Paragraphs 2.11 and 2.12 for single carriageways and Paragraph 3.11 for dual carriageways.

5.13 Figure 5/1 provides a preliminary indication of whether a climbing lane is likely to be economically justified at single carriageway sites using COBA11. The proportion of HGVs is fixed at 10% whilst a range of values have been tested for the following parameters:

- Traffic flow (AADT)
- Height risen (metres)

5.14 A negative NPV (Net Present Value) means that the scheme cannot be justified on economic grounds. The diagram is not sensitive enough to show the changes in NPV due to different percentage HGVs and this can only be recognised in project-specific appraisals. It is also worth noting that in economic terms, HGVs do not benefit much from the provision of a climbing lane on a single carriageway road. It is the light vehicles that benefit most from the increased overtaking opportunities provided and increased speed.

5.15 The height risen (H) and length (L) shall be calculated between two standard points on a hill as defined in Figure 5/2 and Figure 5/3 for both single and dual carriageways. Benefits accrued should be measured against the estimated cost of the climbing lane which will be scheme specific. On typical rural terrain without any high cost elements, the cost may be in the order of £0.35M per km in 1998 prices.

5.16 Where there are high cost elements involved such as environmental effects, structures, or significant earthworks, (which would invalidate the average cost assumptions of Figure 5/1), it may be uneconomic or undesirable to make full provision. In such circumstances, consideration may be given to other options which may require a Departure from standard, as an alternative to omitting the climbing lane altogether.

5.17 An analysis using the QUADRO program (DMRB 14) should also be run to estimate user costs during construction if the lane is added to an existing road. Future maintenance costs and delays to users during maintenance should also be considered.

5.18 Safety: Climbing lanes help to relieve driver frustration and provide a safer overtaking environment. This is particularly the case for climbing lanes on single carriageway roads.

5.19 Factors which help to create a safer road environment include the avoidance of sharp bends, poorly marked and located junctions, short climbing section lengths and short and unusual entry or exit tapers. In particular, the exit taper should not be located in the vicinity of junctions or sharp bends.

5.20 Climbing lanes on trunk roads tend to be safer than climbing lanes on non-trunk roads because of the road geometry. A survey at 83 single carriageway climbing lane sites showed that the average accident rate at trunk road sites in 1998 was 0.119 PIAs per mill.veh.km (climbing lane and both tapers) compared with 0.240 on non-trunk roads. These accident rates compare with the COBA national rates of 0.144 (link only) and 0.260 (combined link and junction) for Modern S2 roads with a prevailing speed limit of 50 or 60 mph.

5.21 As a guide, the presence of a climbing lane on a single carriageway road can be expected to reduce the accident rate by about 25%. A scheme-specific estimate should be made of the accident saving, which may include overtaking accidents both before and after as well as on the climbing lane section if it forms part of an overall overtaking strategy. The estimate of accident saving should be made on the basis of local accident data and records before being incorporated into the safety appraisal.

5.22 Environment: Climbing Lanes can have an impact on the environment in a number of ways and environmental issues need to be considered as an integral part of the design and appraisal process. The likely impact on, for example, wildlife will be neutral or negative if additional land-take is necessary. However the impact may be positive if the increased gradient with diminished earthworks leads to less land-take and reduced visual intrusion, particularly on dual carriageways.

5.23 In addition, and of particular relevance to climbing lanes, driver frustration should also form part of the environmental appraisal process for single carriageway roads (DMRB Volume 11, Section 3, Part 9, Paragraphs 4.1 to 4.9). Whilst useful engineering data relating to driver frustration is scarce, careful consideration should be given to the provision of adequate overtaking opportunities. In other countries, studies have shown that where drivers are forced to follow slow moving vehicles for distances up to 8km, some 35% of drivers disobeyed the law and carried out an unsafe overtaking manoeuvre revealing a high level of driver frustration.

5.24 Integration: The assessment of proposals should take account of all relevant national, regional, strategic and detailed local planning policies including transport policies. As with the assessment of accessibility, a design, which incorporates a climbing lane, should be assessed in accordance with the current recommended appraisal practice.

5.25 Accessibility: It is considered unlikely that the provision of a climbing lane would have a significant effect on the journeys undertaken using non-motorised transport where routes run along the carriageway. The addition of a climbing lane to single or dual carriageways could however have a detrimental impact where at-grade crossings of all purpose carriageways is made unusable where heavy traffic flows prevail. Depending on circumstances this may be termed a Significant Adverse impact under the Accessibility criterion. Potential severance effects should be included in the appraisal along with the viability of maintaining, re-routeing or providing additional measures such as footbridges etc. in the design process. Climbing lanes may involve closure of at-grade crossings in rural situations with resulting provision of footpath diversions.

5.26 New designs would be appraised as part of the full scheme assessment.

5.27 Summary: Due consideration should be taken of the total balance of overall benefits and dis-benefits. The designer should in most cases produce an Appraisal Summary Table where the main environmental, economic, and social impacts are reported.

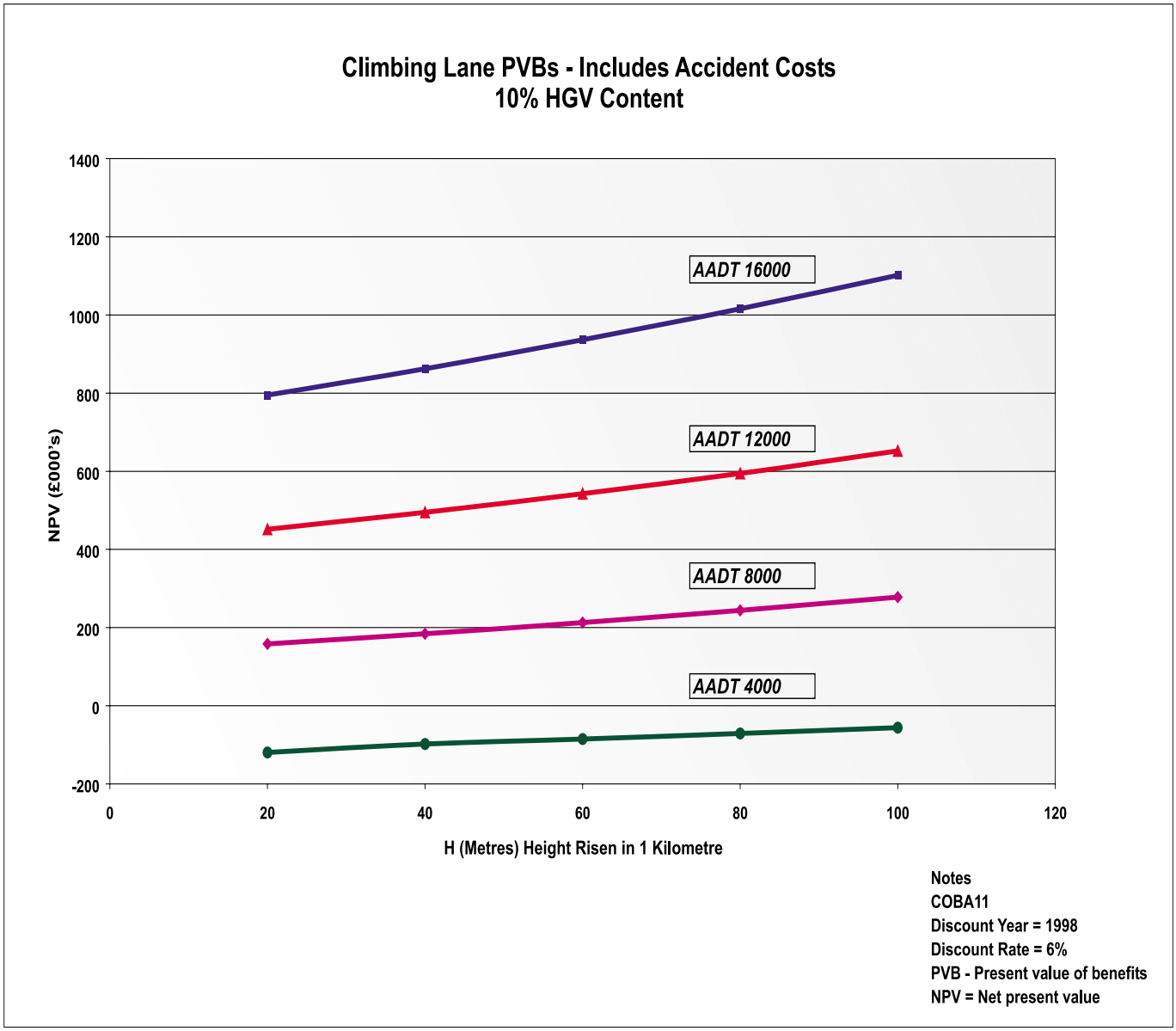

Figure 5/1: Single Carriageway Climbing Lanes - Economic Justification

KEY

S = Start of full width Climbing Lane
F = End of full width Climbing Lane
G = Gradient
H = Height Risen
L = Length

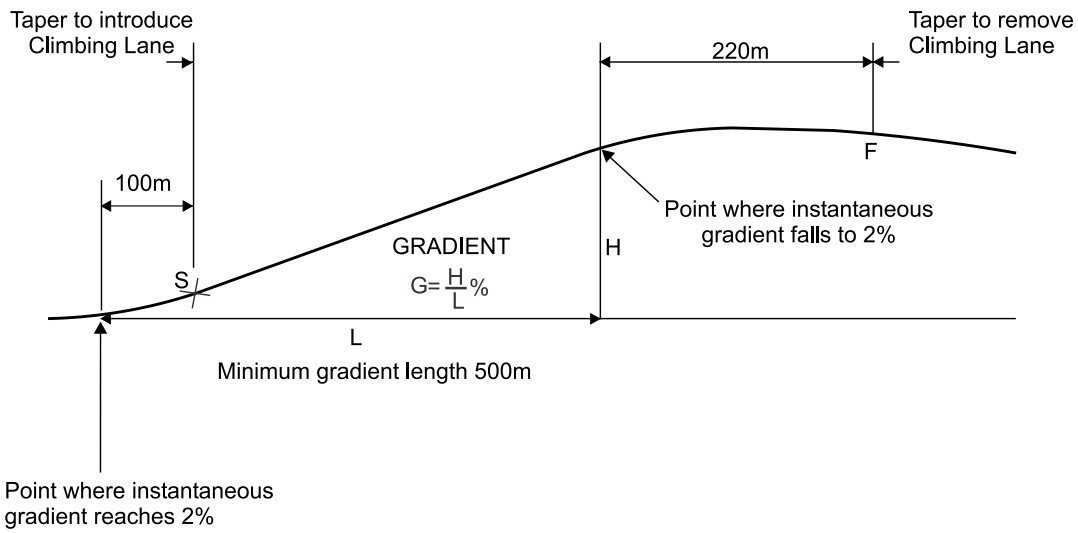

Figure 5/2: Layout of Climbing Lane - Typical
(Terminating 220m beyond the 2% point on the Crest Curve)

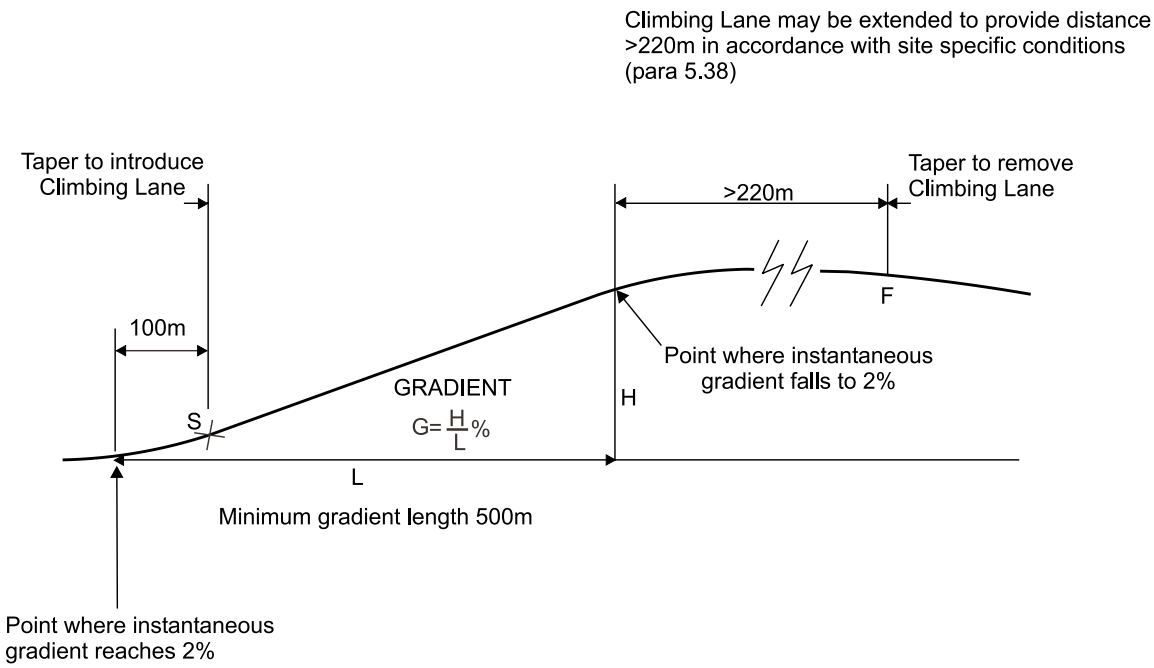

Figure 5/3: Layout of Climbing Lane - Extended
(Terminating beyond 220m from the 2% point on the Crest Curve)

LAYOUT – SINGLE CARRIAGEWAYS

5.28 Climbing Lanes on Wide Single Carriageways: On wide single carriageways (WS2) the normal 2 wide lanes can be reduced, so as to provide an additional climbing lane within the normal cross-section. The scheme appraisal is an integral part of the design process and should enable climbing lanes to be provided wherever their use would be of advantage in permitting slow moving climbing traffic to be overtaken.

5.29 Climbing lanes on WS2 roads however shall not be used for gradients less than 2% or shorter than 500m. In addition, it is important that a driver's perception of the hill is not distorted by the fact that the adjoining topography is on a different vertical alignment and thus may lead to a false impression of the true road gradient (Figure 5/4). Generous visibility at the crest should not be provided as this could cause abuse of the centre line priority.

Figure 5/4: Conflict with general slope of terrain

5.30 Length of Climbing Lanes: The length of Overtaking Section should be a minimum of 500m, excluding any sections on gradients less than 2%. Short climbing lanes have a higher accident risk that is exacerbated by bends in the road. High accident rates are associated with average bendiness (irrespective of climbing lane length) in excess of 50 degs/km.

5.31 Climbing lane road markings tend to confine downhill traffic to a single lane, unless there is ample forward visibility unobstructed by slow-moving vehicles in the climbing lane. It is important therefore, where the length of a climbing lane exceeds about 3km, that some sections are provided with a straight or large radius right hand curvature (see paragraph 7.13) in order to provide an Overtaking Section for downhill traffic, and reduce driver stress (ref DMRB Vol. 11, Section 3, Part 9, Chapter 4).

5.32 Lane Widths: An overall width of 10m (excluding edge strips if provided) shall be divided into 3 lanes, the uphill climbing lane being 3.2m wide, the other two being 3.4m each, as shown in Figure 5/5. Offset priority markings shall be provided.

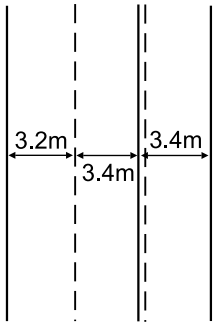

Figure 5/5: Lane Widths

5.33 Hard strips, which enhance visibility and extend the carriageway width, can improve the safety of the climbing lane and should be used where possible and within economic constraints.

5.34 Layout at Start of Climbing Lane: The full width of the climbing lane shall be provided at a point S, 100m uphill from the 2% point of sag curve, and preceded by a taper of 1/30 – 1/40, as shown in Figure 5/6. The alignment at the commencement of the climbing lane shall encourage drivers to follow the nearside channel unless overtaking. The taper shall provide a smooth transition, by utilising the road curvature to develop the extra width, wherever possible.

5.35 Climbing lanes may also be inserted directly into the exit lane of a roundabout where the geometry does not allow the use of conventional layout (Figure 5/7).

5.36 Layout at End of Climbing Lane: The full width of the climbing lane should be maintained up or down the gradient to a point F, 220m beyond the end of the 2% point of the crest curve. After point 'F' a taper of between 1/30 and 1/40 is provided to narrow the carriageway width from the offside thereby removing the extra width that allowed the provision of the climbing lane (see Figures 5/2 and 5/8).

5.37 The alignment at the end of the climbing lane shall place the onus on the overtaking driver to rejoin the inside lane. The taper shall therefore provide a smooth transition in the same manner as that at the start of the climbing lane. Advance warning signs shall be provided as shown in Figure 5/8. Care should be taken to ensure that the return to a single lane does not coincide with junctions or sharp curves.

5.38 Consideration should be given to extending the distance between the 2% point and point 'F', the end of the full width of the climbing lane, in the following circumstances:

- If an existing junction is in the vicinity of the existing merge taper area and/or where the extension enables traffic to merge more safely.

- If the climbing lane is part of an overall Route Strategy for Overtaking and that the climbing lane is extended to maximise overtaking opportunities.

- If a high proportion of HGVs, or slow moving vehicles, currently cause problems or significantly reduce capacity in the merge taper area, the merge may be extended where heavy vehicles are picking up speed as the road begins to descend from the crest of the hill.

5.39 In situations where the climbing lane termination point is extended, greater than 220m beyond the 2% point, the taper arrangement at the end of the climbing lane is the same as that of the climbing lane terminating at 220m beyond the 2% point (as shown in Figure 5/3).

5.40 The climbing lane may terminate at a roundabout so that the overtaking lane becomes the right hand entry lane into the roundabout (Figure 5/9).

5.41 Junctions: Careful consideration should be given with respect to the location of junctions along the length of the climbing lane. In new build situations provision of junctions within the length of the climbing lane (including the tapers) should be avoided. In existing situations priority should be given to a strategy of closure of junctions that occur within the length of the climbing lane and re-routeing of accesses and side roads.

5.42 Signing: Clear signing and road markings at the end of a climbing lane is very important to ensure the vehicles are fully aware of potential “change of lane” movements of vehicles that will be taking place ahead. This is important both from the point of view of safety and efficient operation of the climbing lane.

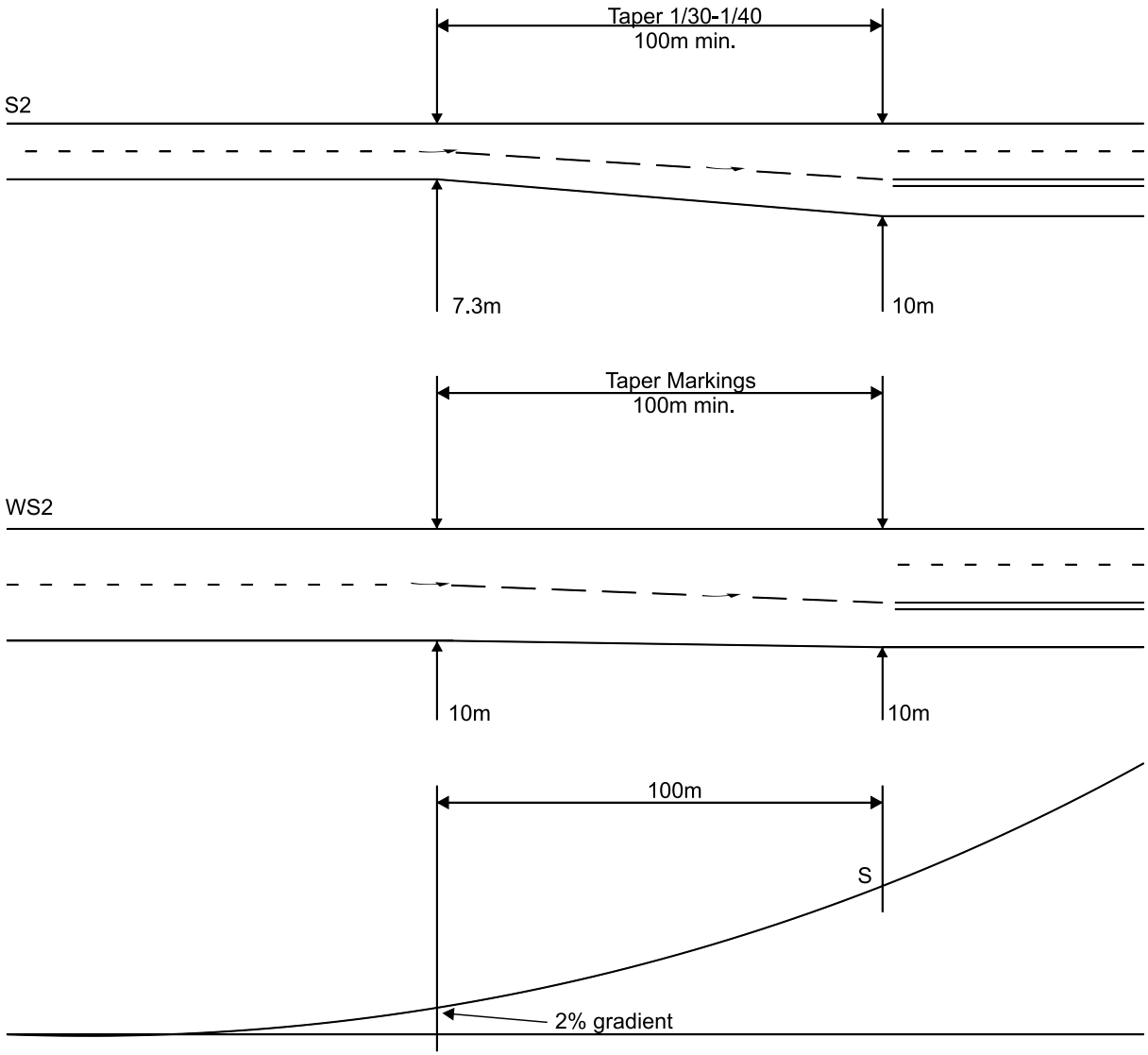

Figure 5/6: Layout at Start of Climbing Lane

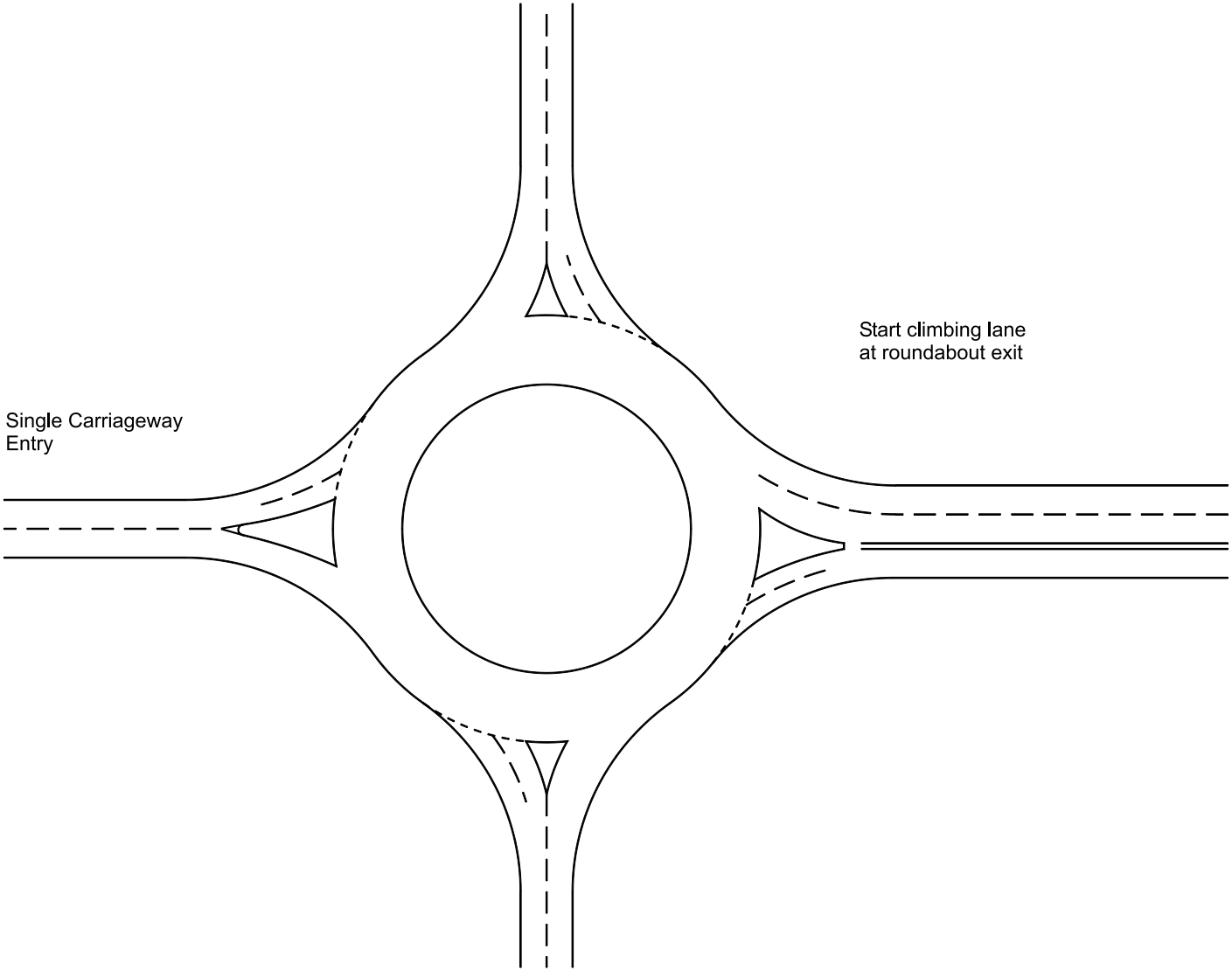

Figure 5/7: Climbing Lane Starts at Roundabout Exit - Single Carriageway

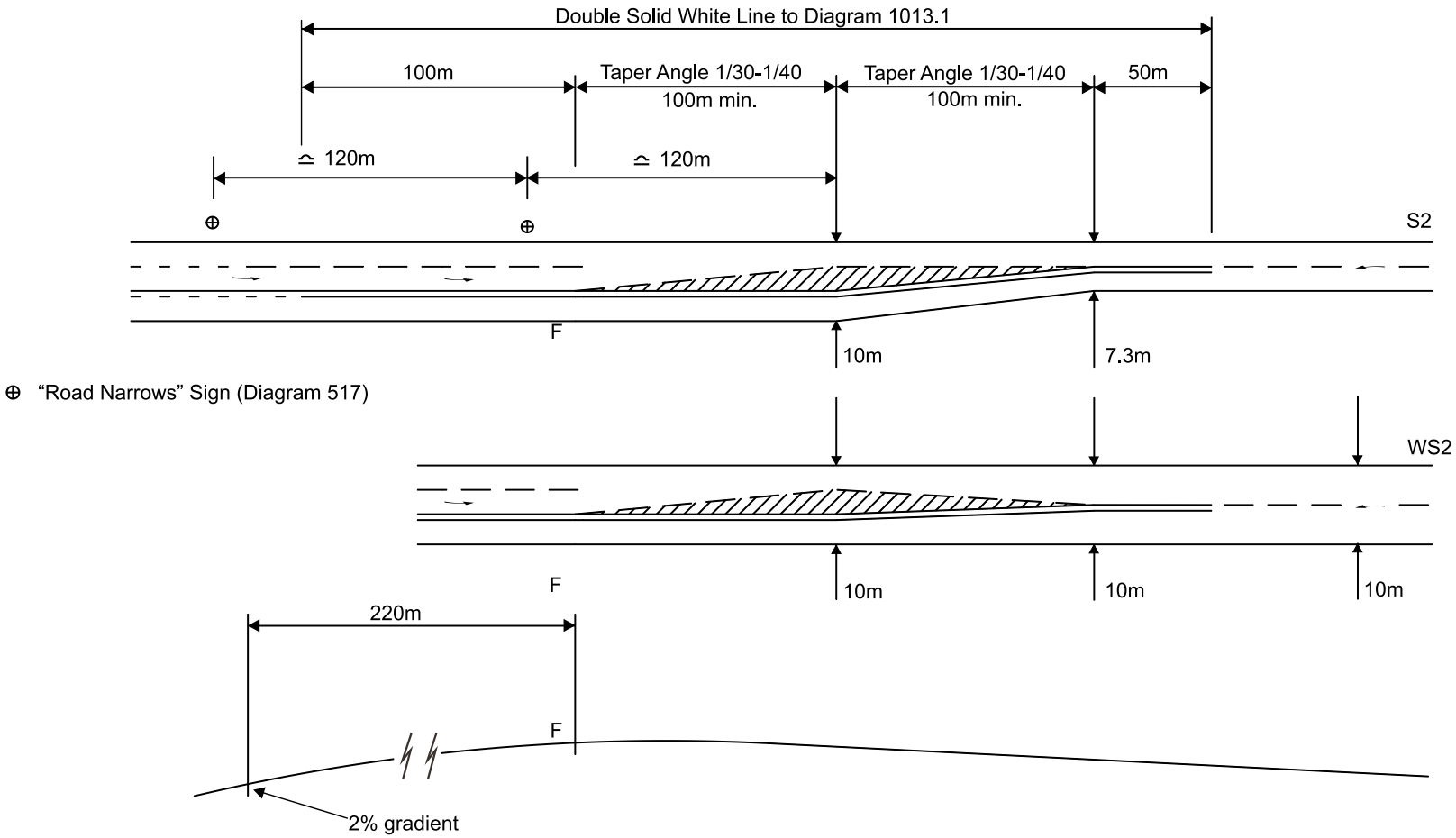

Note: Diagram refers to diagram numbers in the Traffic Signs Regulations and General Directions.

Figure 5/8: Layout at End of Climbing Lane

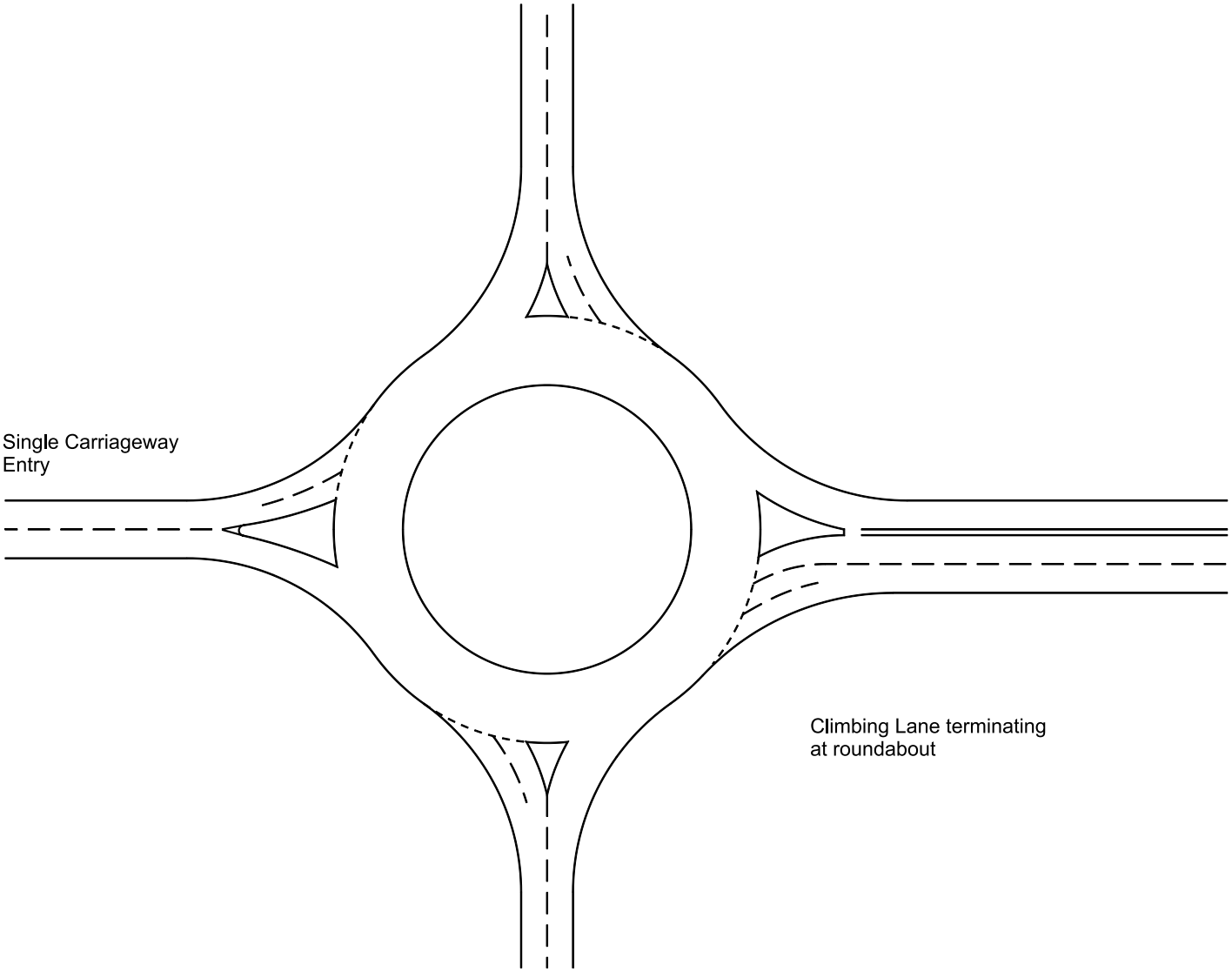

Figure 5/9: Climbing Lane Ends at Roundabout Entry - Single Carriageway

5.43 Layout at Crests (Overlapping Climbing Lanes): Where there are climbing lanes on both sides of the hill, and profile conditions would lead to a four lane road which is locally widened to 13.2m at the change-over on the crest, then:

(i) if the length of 13.2m carriageway (including any hatched area) between the tapers is 500m or more the taper should be terminated (conventionally) as shown in Figure 5/8.

(ii) if the length of 13.2m wide carriageway between the tapers is less than 500m, the climbing lanes should overlap. In this case the distance between the tapers (i.e. the length of 13.2m carriageway including hatching) should not be less than 200m. The layout is shown in Figure 5/10 whilst the procedure for marking overlapping climbing lanes at hill crests is described under paragraph 5.49.

5.44 Layout at Sags: Where there are climbing lanes either side of a sag curve, and conditions would lead to a conventional 2 lane road layout between tapers which would be less than 500m in length, the intervening carriageway should be maintained at 10m wide. The climbing lanes should be extended downhill until they meet, with a road marking as defined under paragraph 5.50.

5.45 Sight Distance Requirements: Climbing lanes do not require Full Overtaking Sight Distance, but the Desirable Minimum Stopping Sight Distance shall be provided throughout. In difficult circumstances a one step relaxation below Desirable Minimum SSD may be provided. Care should be taken, however, in the design of the crest curve. If vehicles on the crest approaching the downhill section are provided with a high visibility crest curve, there may be a possibility of subsequent abuse of the priority rule. The crest curve should be designed to just above one step below the Desirable Minimum K value, with a double white line marking as in Figure 5/10 to clearly establish the climbing lane priority.

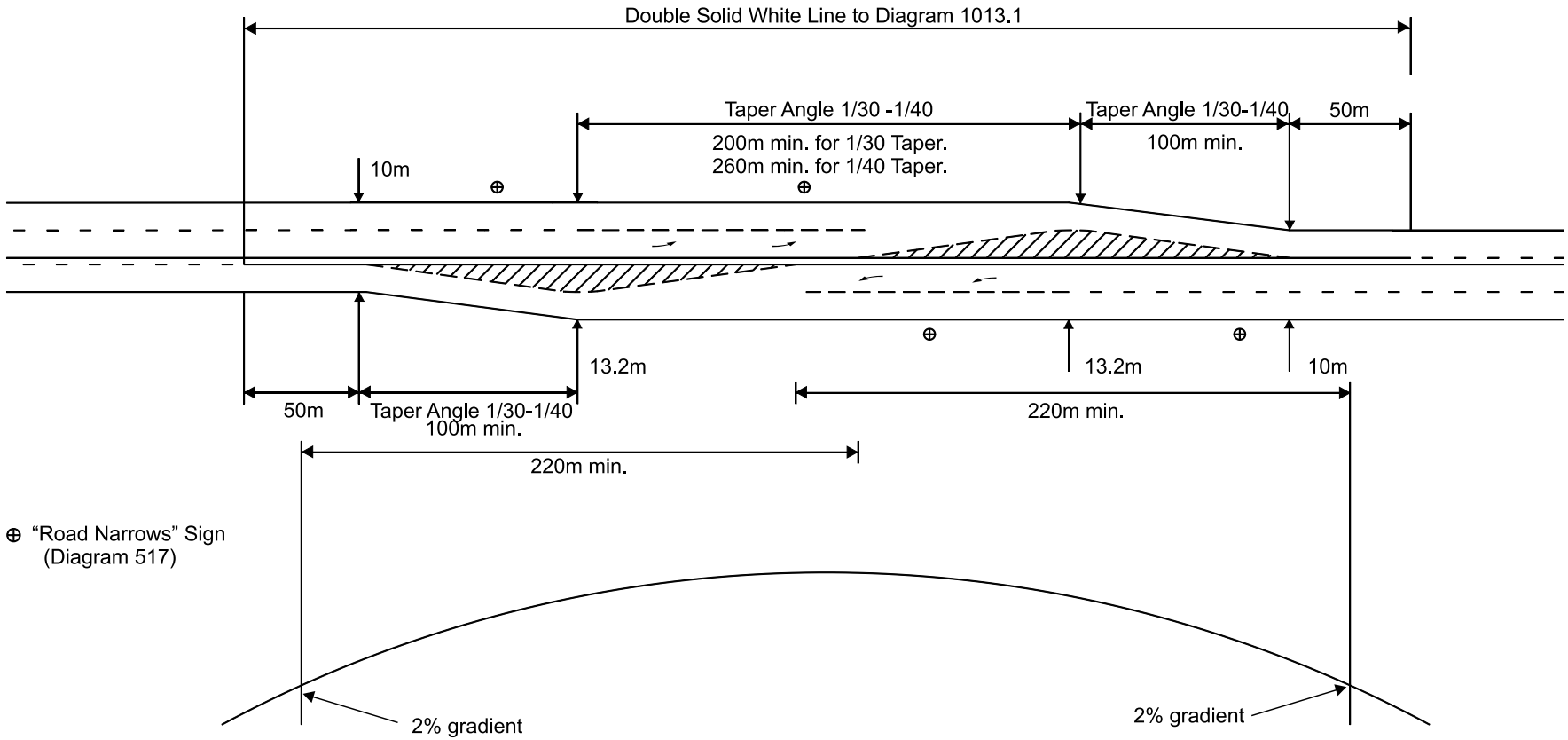

Figure 5/10: Crest Curve at Overlapping Climbing Lanes

5.46 Procedure for Marking Climbing Lane: A three-lane hill is marked with a lane line separating the two uphill lanes. A double white line separates the two uphill lanes from the downhill lane. The double white line will feature a continuous line for uphill traffic in all cases, and a continuous line for downhill traffic except where the criteria for adopting a broken line is satisfied, (ref Traffic Signs Manual, Chapter 5, Road Markings).

5.47 To avoid frequent changes of pattern on long hills, or for safety reasons, the designer may use a downhill continuous line even when the visibility criteria for a broken line are satisfied, although the use of a prohibitory line on long straight sections should be avoided if possible.

5.48 The marking at the commencement of the climbing lane should be designed to encourage uphill drivers to keep to the near side lane unless overtaking (see figure 5/11). In order to avoid potential conflict at this point between uphill and downhill overtaking traffic, a length of double continuous line should be provided for a length equal to 'W' (see table below) according to the speed of uphill traffic. This ensures that any downhill overtaking vehicle will be returned to the near side lane before coming into conflict with an uphill vehicle. In addition, the double white line may be extended to divide opposing traffic over the taper in order to prevent overtaking by downhill traffic. However, if visibility over this length is good, then a warning line might be more effective.

85 percentile speed (kph)	Warning line visibility distance W(m)
60	145
70	175
85	205
100	245
120	290

5.49 Procedure for Marking at Crests (Overlapping Climbing Lanes): The procedure for marking overlapping climbing lanes at hill crests is shown in Figures 5/13 and 5/14. These emphasise that in situations where opposing climbing lanes meet or pass at the crest of the hill, the hatched road markings at the end of the opposing lanes must not overlap, so that the differentiation between the opposing lanes is maintained. Figure 5/13 applies to situations where the overall carriageway is locally widened to 13.4m and where conventional exit taper layout would lead to a distance between ends of tapers of less than 500m. Figure 5/13 also illustrates that the minimum distance between tapers will vary depending upon the taper and climbing lane width (200m assuming a 1/30 taper to lose a 3.2m climbing lane and 260m assuming a 1/40 taper to lose a 3.2m climbing lane). Advice under paragraph 5.38 already permits the extension of climbing lane beyond the 2% crest curve which will facilitate this differentiation beyond the minimum requirement. Figure 5/14 serves to show the method of marking if the carriageway over the crest remains unchanged at 10m.

5.50 Marking at Sags: The procedure for marking adjoining climbing lanes at sag curves is shown in Figure 5/15. The taper marking should not be sharper than 1 in 50.

5.51 Marking at Junctions: In circumstances where the recommendations of paragraph 5.41 cannot be accommodated, the markings of right turn lanes at a climbing lane location should be as shown in Figure 5/16 in the uphill direction and Figure 5/17 in the downhill direction. Note that in the uphill direction the continuous lines are to the right of the hatching, whilst in the downhill direction they are on the left of the hatching so as not to encourage high speeds.

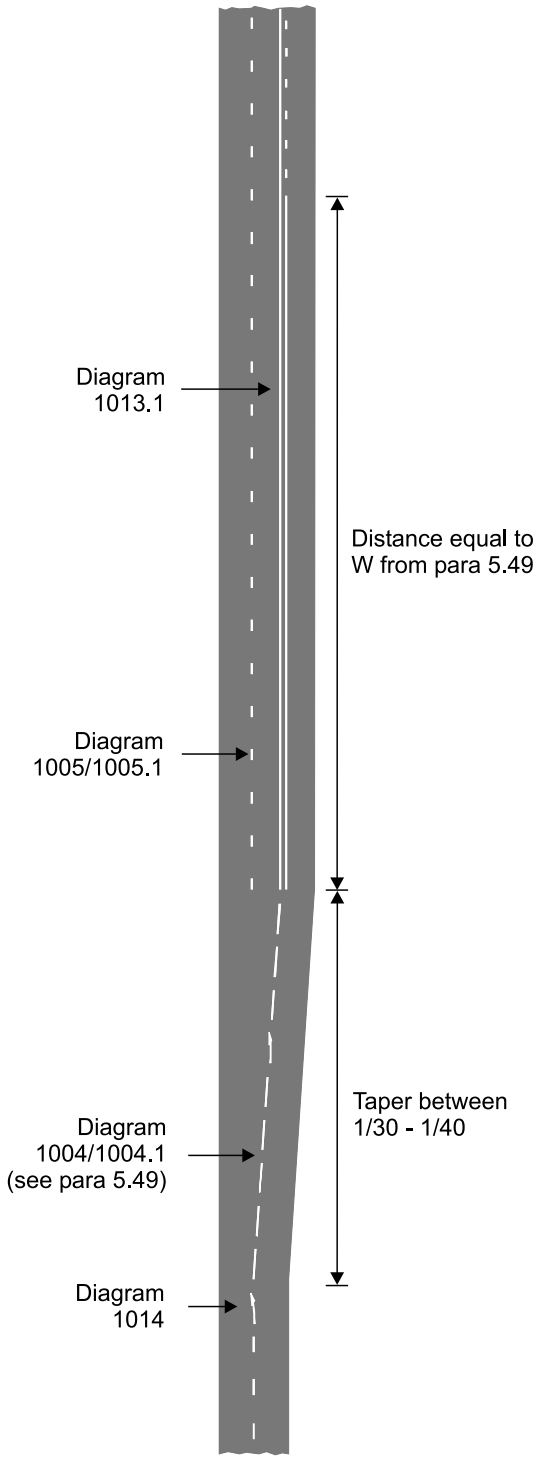

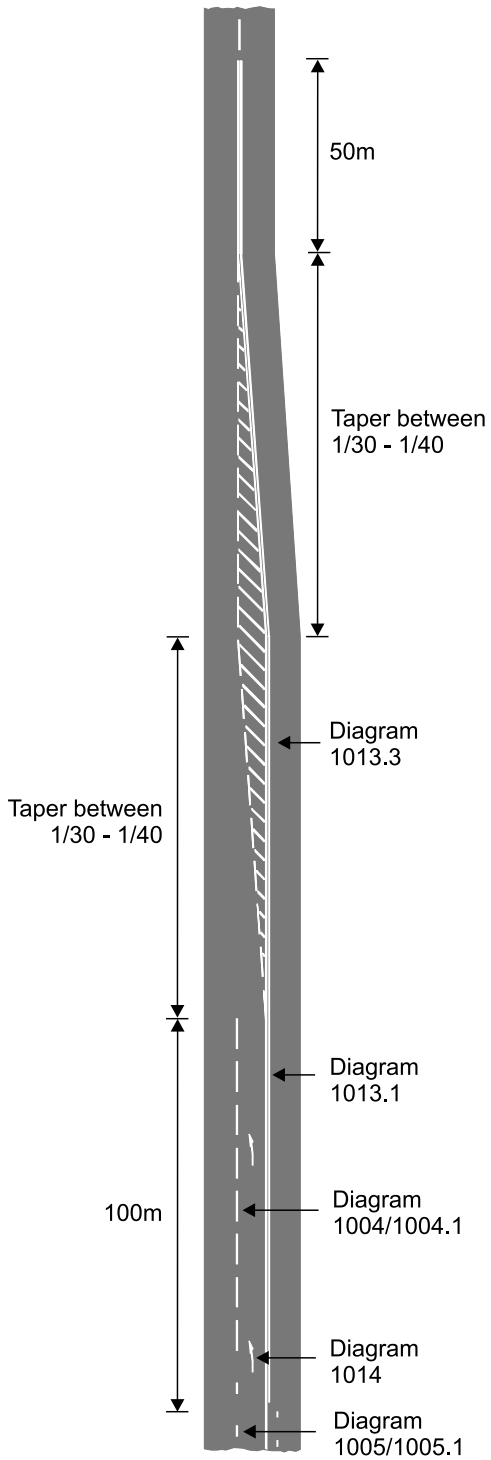

NOT TO SCALE

Figure 5/11: Marking at Start of Climbing Lane

Figure 5/12 : Marking at End of Climbing Lane

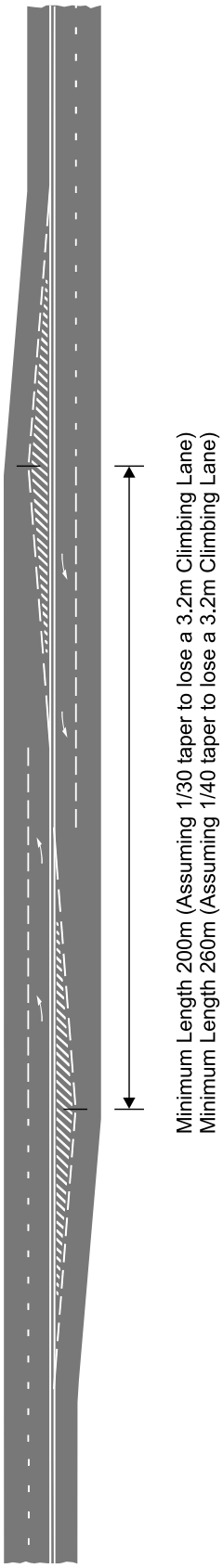

Figure 5/13: Marking at Crests
Climbing Lanes Overlap

NOT TO SCALE

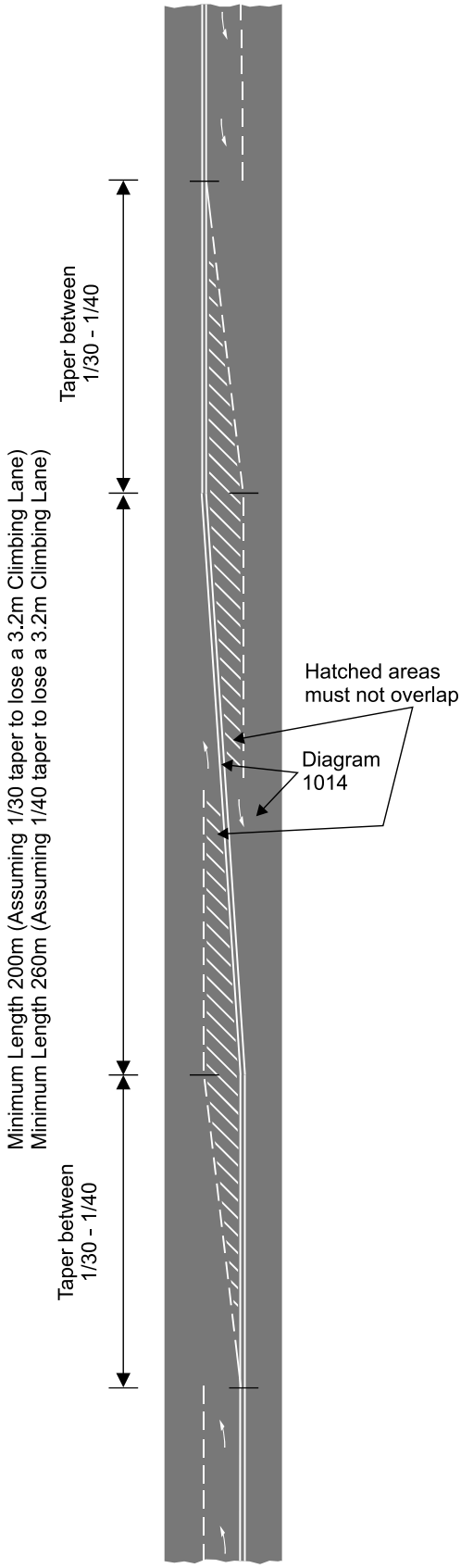

Figure 5/14 : Marking at Crests
Climbing Lanes Terminate in Advance

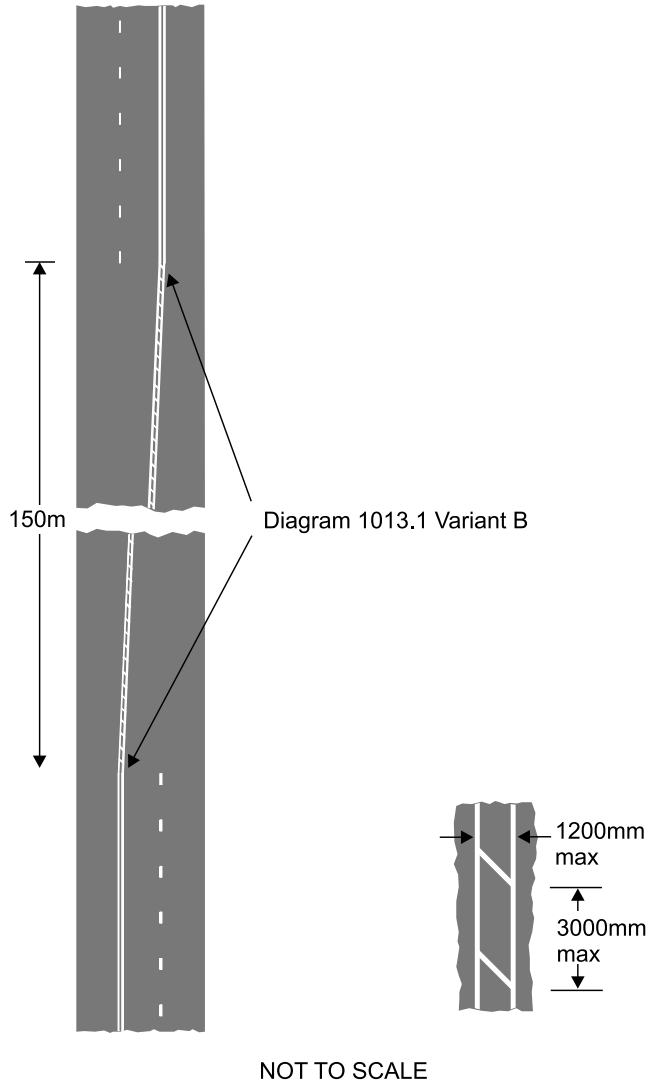

Figure 5/15: Marking at Sags Between Two Climbing Lanes

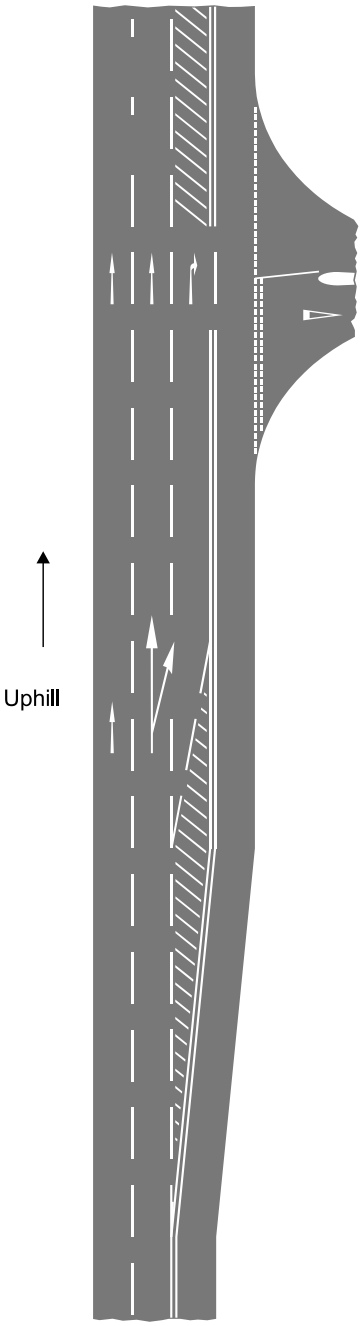

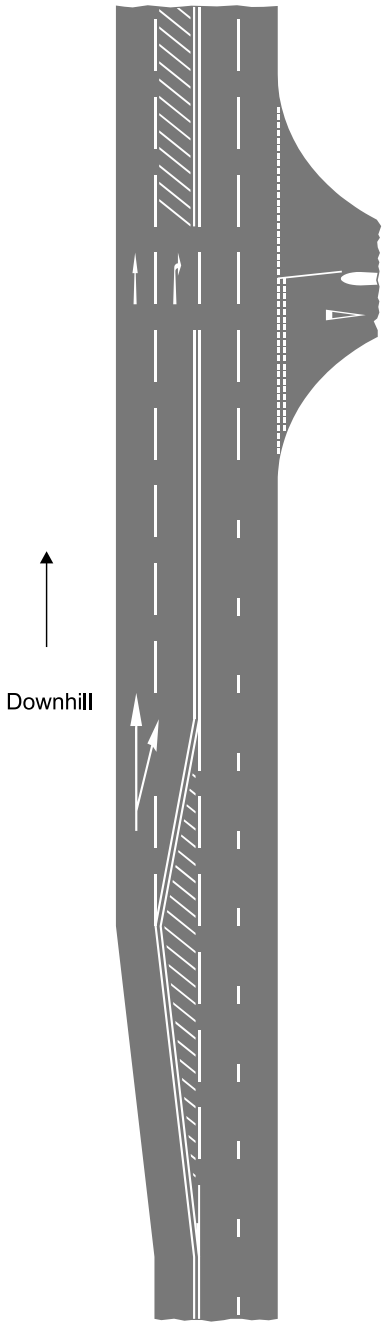

NOT TO SCALE

Figure 5/16: Marking at Junction Uphill

Figure 5/17 : Marking at Junction Downhill

LAYOUT – DUAL CARRIAGEWAYS

5.52 Options: Climbing lanes add another optional element to the treatment of vertical alignment. They may allow steeper, shorter, gradients to be considered, which would reduce earthworks, be less intrusive to the local environment, and offset the cost of the wider road. However from a traffic benefit viewpoint, the option of flattening gradients may often be preferable. The implications of long steep gradients on the downhill carriageway should also be considered.

5.53 In certain situations, for example owing to land constraints, it may be necessary to consider the adoption of narrow uphill lanes (see Paragraph 5.56), providing the climbing lane partially within the normal verge/marginal strip width to reduce the high cost implications, rather than omit the climbing lane altogether. However, the effects on future network management and maintenance operations will need to be considered. Such a Departure from Standards will require approval in the normal way.

5.54 Consideration should be given to extending the climbing lane beyond the 2% gradient if a high proportion of HGVs or other slow moving vehicles currently cause problems or significantly reduce capacity. On existing roads an economical approach to extending climbing lanes is to remove the hard shoulder for the distance for which additional climbing lane length is needed, so that the additional lane can be added within the road space. In cases where the hard shoulder is not sufficiently wide it may also be necessary to consider reducing the width of the running lanes. Advice on the allowable reduction in the lane widths is given in Paragraph 3.14. Further advice on reduction of lane widths and on the removal of any length of hard shoulder should be sought from the Overseeing Organisation as both are deemed to be a Departure from Standard.

5.55 On dual 3-lane motorways, if it is considered that a nearside merge of the climbing lane might be less hazardous than in the offside lane where traffic volumes are high, advice should be sought from the Overseeing Organisation; as a proposal for traffic to merge in the nearside lanes would be deemed a departure from Standards. Experience from the introduction of climbing lanes on the M25, shows that the traffic merging in the nearside lanes (1 and 2) can be less hazardous than in the off-side lane where traffic volumes are high.

5.56 Lane Widths: An overall additional full lane width of 3.65m shall be provided. In difficult areas, or due to high structural or environmental costs, where full lanes cannot be provided, a reduction is permitted by using narrow lanes at pinch points (see Paragraph 3.14 Lane Width Reductions at Pinch Points).

5.57 Layout at Start of Climbing Lane: The full width of the climbing lane shall be provided at a point S in a similar manner to that described for single carriageway roads (Paragraph 5.34), but preceded by a taper of at least 1/45, as shown in Figure 5/18. Wherever possible the additional width should be developed by utilising the road curvature to provide a smooth transition.

5.58 Climbing lanes may not be inserted directly at the exit of a roundabout but should allow for a distance of at least 100m before the entry taper to avoid conflicting traffic movements on exiting the roundabout. The entry taper can be reduced in length from 1/45 to 1/30 owing to reduced vehicle speeds exiting the roundabout (Figure 5/19).

5.59 Layout at End of Climbing Lane: The full width of the climbing lane shall be maintained up the gradient to a point F, in a similar manner to that described for single carriageway roads (Paragraph 5.36), but followed by a taper of 1/45. Where site conditions permit longer tapers should be considered. A smooth transition should be used wherever possible (Figure 5/20).

5.60 The climbing lane may precede a roundabout so that the overtaking lane becomes the right hand entry lane into the roundabout. However, where the climbing lane ends at a distance greater than 500m from the roundabout it should be terminated in the normal way (Figure 5/21).

5.61 Sight Distance Requirements with Climbing Lanes: As the speeds of vehicles utilising the climbing lane will be considerably less than those on the rest of the carriageway, the climbing lane should be disregarded in respect of provision of stopping sight distance, which shall be checked from the centre of the inside lane of the original carriageway.

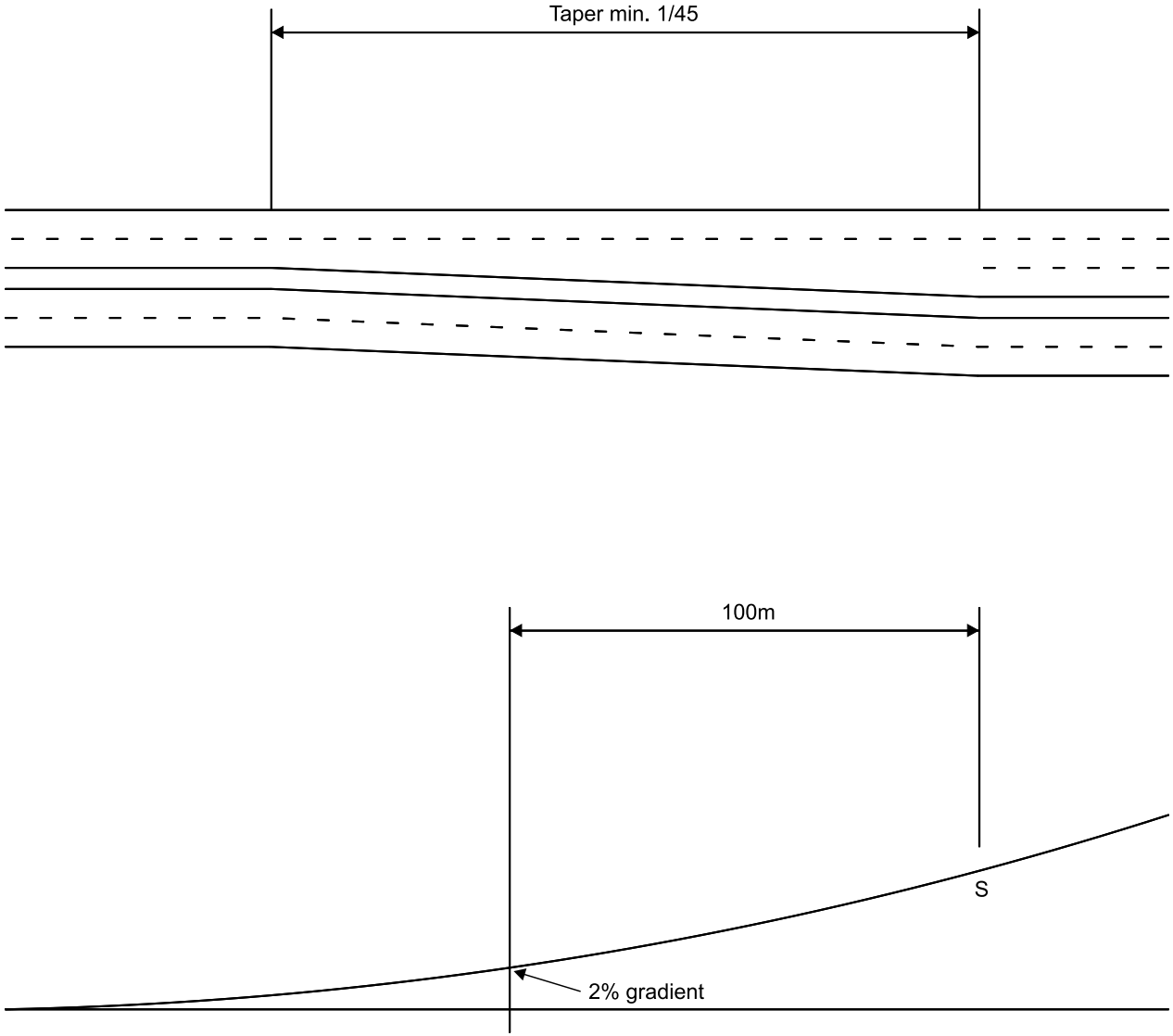

Figure 5/18: Start of Dual Carriageway Climbing Lane

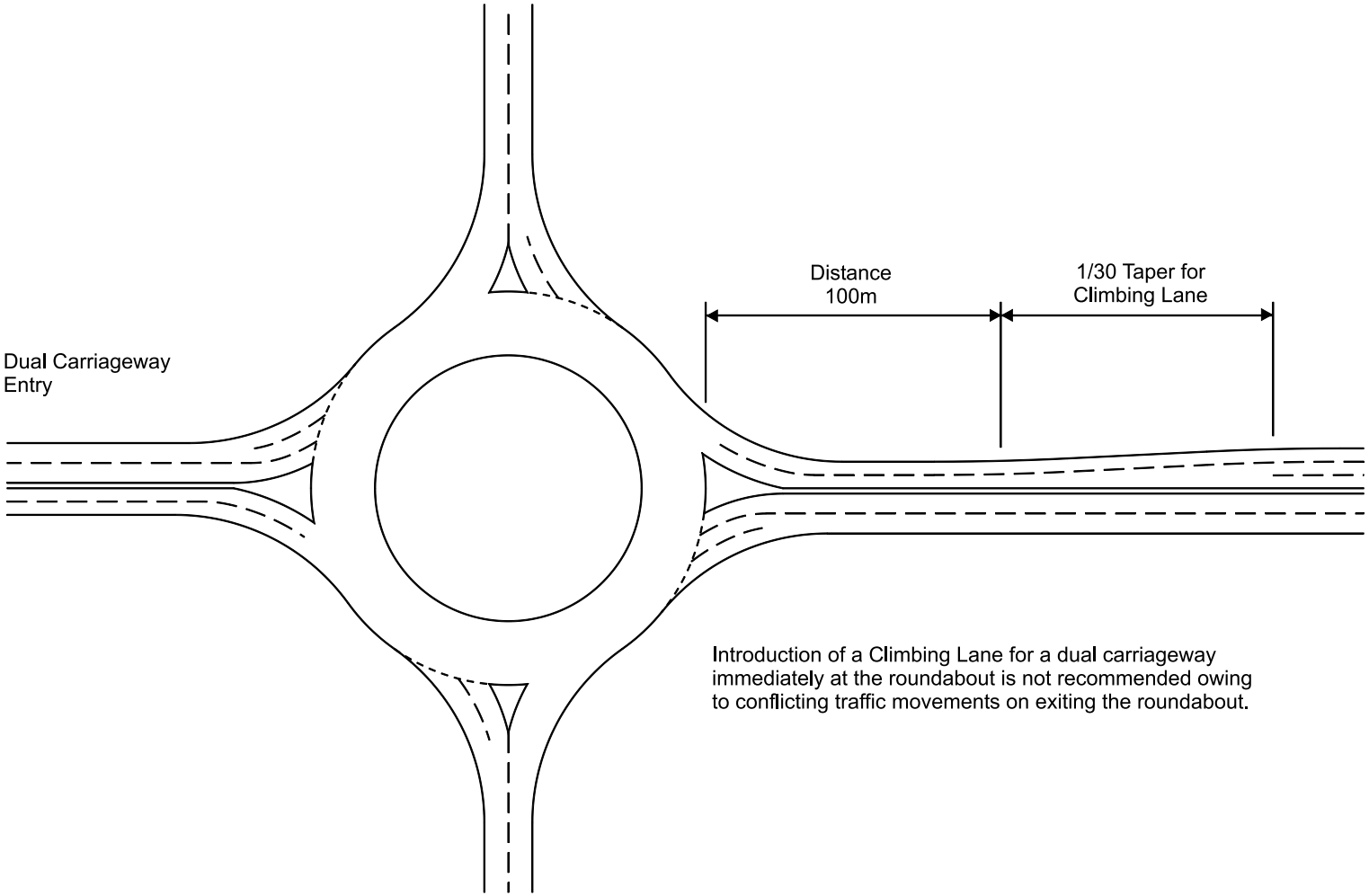

Figure 5/19: Start of Climbing Lane at Roundabout

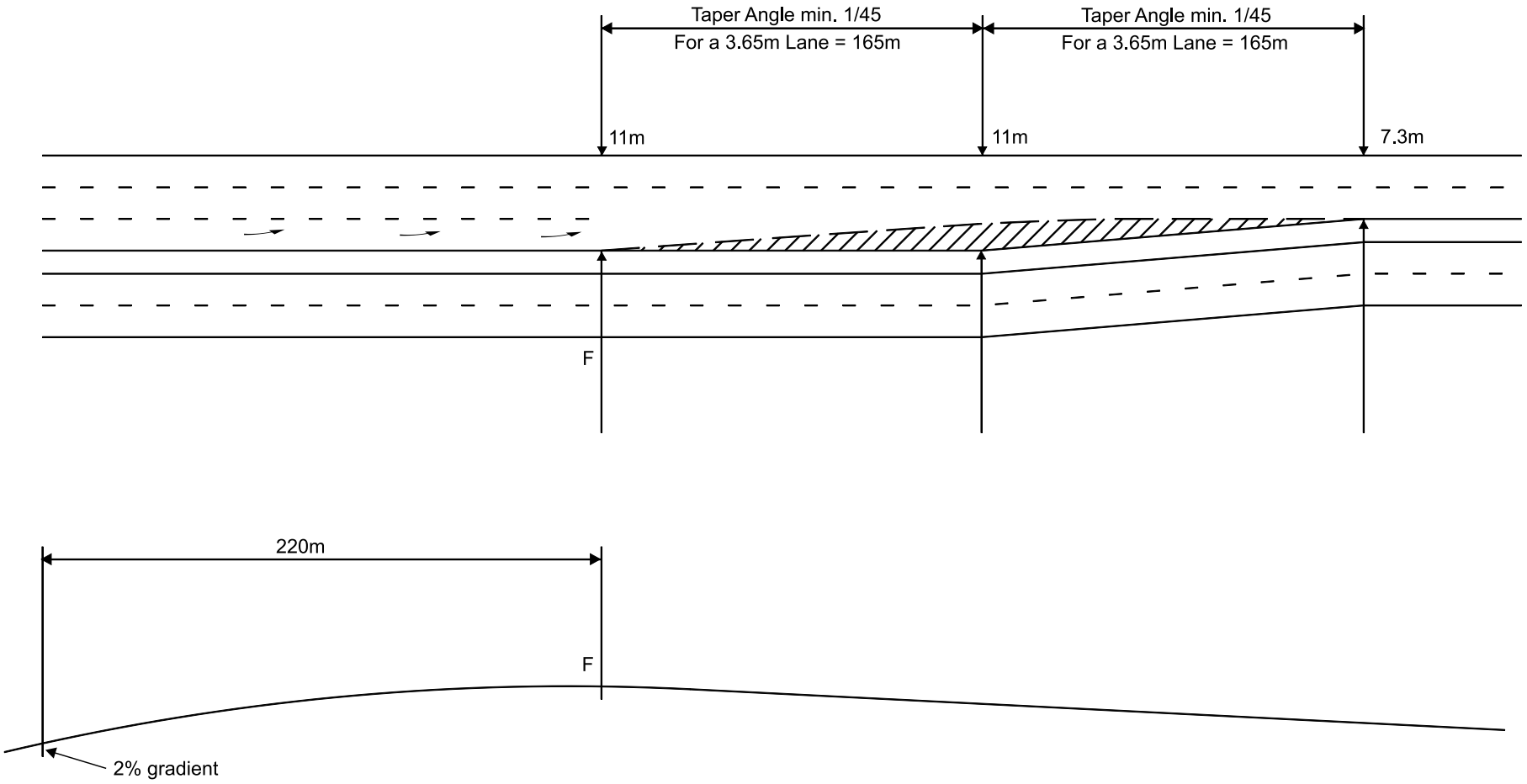

Figure 5/20: End of Dual Carriageway Climbing Lane

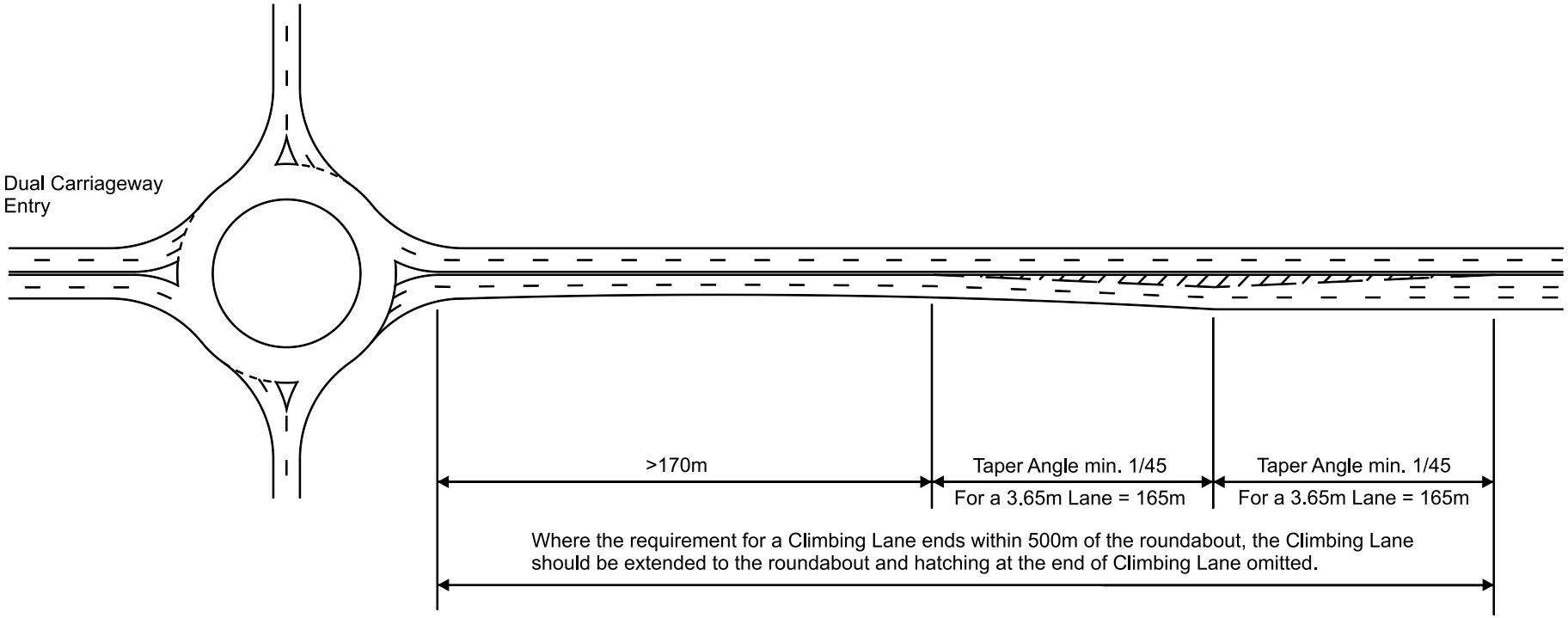

Figure 5/21: Climbing Lane End at Roundabout Entry - Dual Carriageway

6. INTRODUCTION TO COORDINATED LINK DESIGN

General

6.1 The various elements detailed in this Standard shall be coordinated, together with cross-section and junction layouts, so as to ensure that the three dimensional layout as a whole is acceptable in terms of traffic safety and operation, and economic/environmental effects. Single carriageway design is given particular emphasis due to the problems of driver understanding and provision for overtaking.

Rural Roads

6.2 A general guide to the layout features appropriate for various types of road is given in Table 4. The table recommends edge treatments, access treatments and junction types that would be suitable in broad terms for each type of road.

Urban Roads

6.3 It is not possible to tabulate overall layout characteristics for roads in urban areas in the same way as for rural areas, as the constraints of the existing urban fabric will result in designs tailored to meet the site specific requirements. Urban Standards (embracing mandatory speed limits, Design Speeds generally 85kph and below, and reduced cross-section design), are more conducive to safe conditions where the surrounding development is very much of an urban nature. Urban Standards should not normally be used for roads passing through other than short lengths of parklands, recreational areas, non-built up waste land, etc., which present an open aspect.

6.4 In urban areas, there will usually be less scope for coordinating the geometric features than in rural areas, although wherever economically/environmentally practicable every effort should be made to do so. The demands of accommodating the road within the urban fabric will frequently predominate.

6.5 Single two lane carriageway S2 or WS2 urban roads of Type B, with no frontage access, no standing vehicles and negligible cross traffic, would normally represent a radial or orbital bypass or new town distributor. The design considerations in respect of Overtaking Sections in Chapter 7 should be applied wherever economically/environmentally practicable, although the constraints of the urban area will frequently not permit the flexibility of alignment required. In some cases, extra road width (ie WS2 or even 4 lane carriageways) can be used to provide overtaking opportunity if economically feasible.

6.6 Single two lane carriageways S2 or WS2 with frontage development, side roads, bus stops, etc with the paramount need to create safe conditions for pedestrians, are likely to be modest projects in an area where comprehensive traffic management has been carried out on the existing network and the new road is required to extend or improve that management. It is unlikely that the coordinated design aspects contained hereafter will be applicable in these cases.

Category (1)	Type of Road (2)	Edge Treatment (3)	Access Treatment (4)	Minor Road Treatment (5)	Major Junction Treatment (6)
1	Normal (7.3m) Carriageway S2	Kerbs and raised verges. Pedestian footways where required	Restriction of access to avoid standing vehicles and concentrate turning movements	Ghost islands	Ghost islands
2	S2	1m hard strips as normal	As 1	As 1	Ghost islands at lower end of traffic range otherwise single lane dualling or roundabouts
3A 3B	S2 Wide Single * (10m) Carriageway WS2	1m hard strips Pedestrian usage minimised As 3A	As 1 and clearway at the top of the traffic range As 3A	Ghost islands or single lane dualling As 3A	Single lane dualling or roundabouts As 3A
4	WS2 *	As 3A	Restriction of access to avoid standing vehicles and concentrate turning movements. Clearway	Single lane dualling or roundabouts. Some side roads stopped up. Occasional bridges at higher end of traffic range.	At-grade roundabouts

* The approval of the Overseeing Department is required for schemes which will create more than 2km of these categories

Table 4: Recommended Rural Road Layouts

5	Dual 2 Lane (7.3m) Carriageways All Purpose D2AP	Kerbs and raised verges or 1m hard strips	Restriction of access to avoid standing vehicles and concentrate movements. Clearway	Priority junctions. No other gaps in the central reserve.	At-grade roundabouts. Grade separation if economically justified.
6	D2AP	1m hard strips	Restriction of access severely enforced. Clearway.	No minor junctions at-grade. No gaps in the central reserve.	At-grade roundabouts at lower end of range. Otherwise full grade separation.
7A	D2AP	As 6	No access except isolated existing access with left turns only. Clearway	As 6	Full grade separation
7B	Dual 2 lane motorway D2M	Motorway standards	Motorway Regulations	None	Motorway Standards
7C	Dual 3 lane (11m) Carriageways All Purpose D3AP	As 6	As 7A	As 6	As 7A
8A	D2M	As 7B	As 7B	As 7B	As 7B
8B	D3AP	As 6	As 7A	As 6	As 7B
9	Dual 3 lane Motorway D3M	As 7B	As 7B	As 7B	As 7B
10	Dual 4 lane Motroway D4M	As 7B	As 7B	As 7B	As 7B
		Category 10 requires Overseeing Department Authorisation			

7. SINGLE 2 LANE CARRIAGEWAY ROADS

General Principles

7.1 Single 2 lane carriageways up to 10m wide (running width) shall be designed with the objectives of safety and uncongested flow in mind. This Chapter gives methods of achieving these objectives. Although they are to some extent related, for instance frustrated traffic tends to lead to unsafe conditions, it is important to identify some other aspects which if not taken into account in the design may lead to a higher than average proportion of serious accidents. Amongst these are:

a. Continuous flowing alignments, (Paragraphs 7.25 & 7.28).

b. Treatment of grade separation on single carriageways (Paragraph 7.35).

c. Single carriageway alternating with dual carriageway, (Paragraphs 7.16, 7.36, 7.39, 7.40 and 7.41).

d. Staged construction, (Paragraphs 7.37, 7.38, 7.47 and 7.48).

7.2 Clearly identifiable Overtaking Sections for either direction of travel are required to be frequently provided throughout the single carriageway according to the design flow, so that vehicles can maintain the Design Speed in off-peak conditions. In peak conditions overtaking opportunities will be rare, nevertheless steady progress will be possible for the majority of vehicles if junctions are carefully designed, and if climbing lanes are provided wherever the forecast traffic demand is sufficient to justify a climbing lane according to Paragraph 5.2.

7.3 In easy terrain, with relatively straight alignments, it may be economically feasible to provide for continuous overtaking opportunity by means of consistent provision of Full Overtaking Sight Distance (FOSD). Where significant curvature occurs or the terrain becomes increasingly hilly, however, the verge widening and vertical crest requirements implicit in this design philosophy will often generate high cost/environmentally undesirable layouts. The alternative philosophy of clearly identifiable Overtaking Sections, including climbing lanes to avoid heavy earthworks, interspersed with clearly Non-overtaking Sections, will frequently result in a more cost effective design provision. The trade-off between alternative alignments of the construction and user costs, including accidents, shall be tested by COBA (Scotland - NESA).

7.4 In the coordination of vertical and horizontal alignments, many of the principles contained in Paragraph 8.7 (Category 7A and 8B dual carriageways) are equally applicable to the design of single carriageway roads. However, the overriding need to design for adequate overtaking will frequently supersede the general desirability for full coordination of vertical and horizontal alignment, with design concentrating upon the provision of straight Overtaking Sections. At sags and crests, however, designs should still be checked to ensure that the road in perspective does not take on a disjointed appearance.

Overtaking Sections

7.5 General: Overtaking sections are sections of road where the combination of horizontal/vertical alignment, visibility, or width provision is such that clear opportunities for overtaking will occur.

Overtaking sections, which are fully defined in Paragraphs 7.7 to 7.16, comprise:

a) Level Overtaking Sections
b) Climbing Lane Sections
c) Single Lane Downhill Sections
d) Dual or S4 Sections

It is necessary for the calculation of Overtaking Value (Paragraph 7.19) to define the method by which the lengths of Overtaking Sections are assessed, and the method of measurement for each category of Overtaking Section is described in the following Paragraphs. In general, they will commence whenever either FOSD on a straight or right hand curve is achieved, or the width provision is sufficient for overtaking without crossing the dividing line between opposing lanes. They will terminate either at a point where sight distance reduces to FOSD/2m when approaching a Non-overtaking Section, or at a distance of FOSD/4m prior to an obstruction to overtaking. (The detailed measurement of single lane downhill sections, however, is described in Paragraph 7.13).

7.6 The method of measurement described in the following section is based upon curvature/visibility relationships for S2 roads. Whilst the additional road width of a WS2 provides much greater flexibility for overtaking, largely independent of curvature, the following design rules should still be used to achieve an optimal overtaking design.

7.7 Level Overtaking Sections : Level Overtaking Sections are sections of single two lane carriageways, with normal centre of carriageway road markings providing clear opportunities for overtaking. They consist of straight or nearly straight sections affording overtaking in both directions (with horizontal radius of curvature greater than that shown in Table 5) and right hand curves, the commencement of which are provided with at least FOSD.

The section, which is shown in Figure 19, is measured as follows:

7.8 Commencement : At the point on a straight or right hand curve where FOSD is achieved, either within or without the highway boundary.

7.9 Termination

a) At a point FOSD/4m prior to the tangent point (or centre of transition) of a left hand curve

b) The point on a right hand curve where sight distance has reduced to FOSD/2m

c) A point FOSD/4m prior to an obstruction to overtaking (see Paragraph 7.18).

Design Speed kph	100	85	70	60	50
Minimum Radius of Straight or nearly Straight sections (m)	8160	5760	4080	2880	2040

Table 5

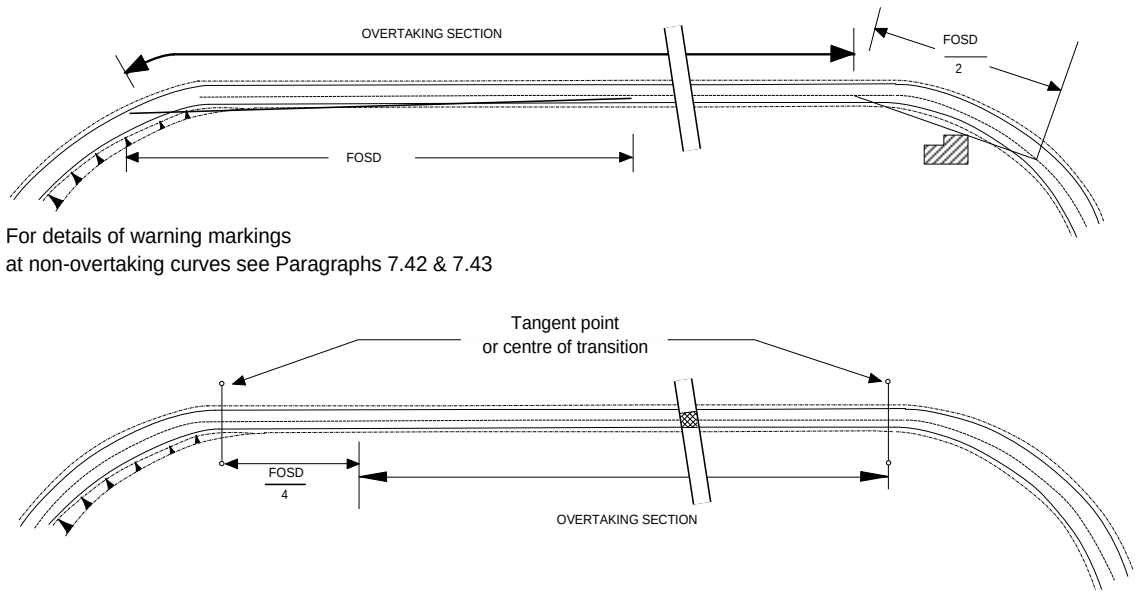

Figure 19 Level Overtaking Sections

7.10 Climbing Lane Sections : Climbing lane sections are sections where priority uphill overtaking opportunities are provided by means of two uphill lanes, separated from the opposing downhill lane by means of a double white line, (either double solid or solid/broken). The section, which is shown in Figure 20, is measured as follows:

7.11 Commencement : A point at the centre of the commencing taper.

7.12 Termination : A point FOSD/4m prior to the centre of the finishing taper. However, if the following section is an Overtaking Section, it should be assumed to be contiguous with the climbing lane section.

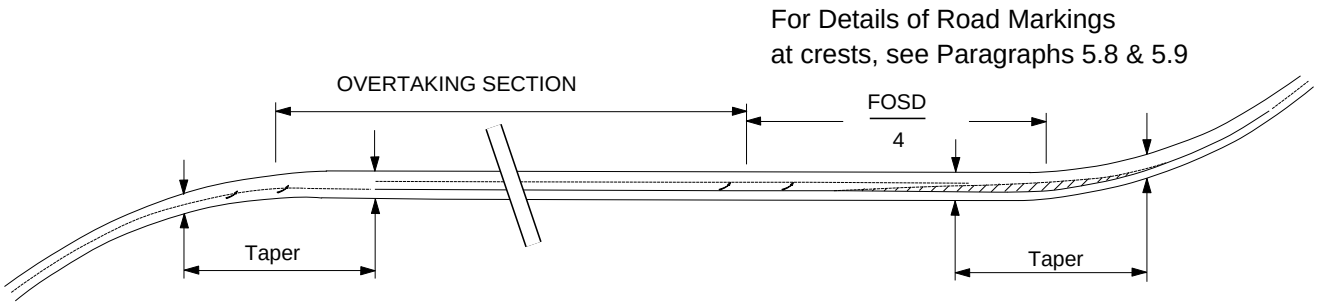

Figure 20 Climbing Lanes

7.13 Single Lane Downhill Sections : Single lane downhill sections are sections of a single downhill lane constrained by a solid/broken double white line, where the combination of visibility and horizontal curvature provide clear opportunities for overtaking when the opposing traffic permits. They consist of straight or nearly straight sections, and right hand curves with radii greater than those shown in Table 6.

Design Speed kph	100	85	70	60	50
Minimum Radius of Single Lane Downhill Sections (m)	2880	2040	1440	1020	720

Table 6

The sight distance naturally occurring within the normal highway boundaries at the radii shown in Table 6 will be sufficient for downhill overtaking, and thus, for single lane downhill lane sections, verges shall not be widened to give FOSD. However, these sections should only be considered as Overtaking Sections on straight grades or sag configurations, ie. when the road surface is not obscured by a vertical crest curve within:

FOSD, or

the horizontal sight distance available around the curve

The section, which is shown in Figure 21, is measured as follows:

7.14 Commencement : The point where the right hand curve radius achieves the requisite value from Table 6.

7.15 Termination : A point FOSD/4m prior to the end of the requisite radius.

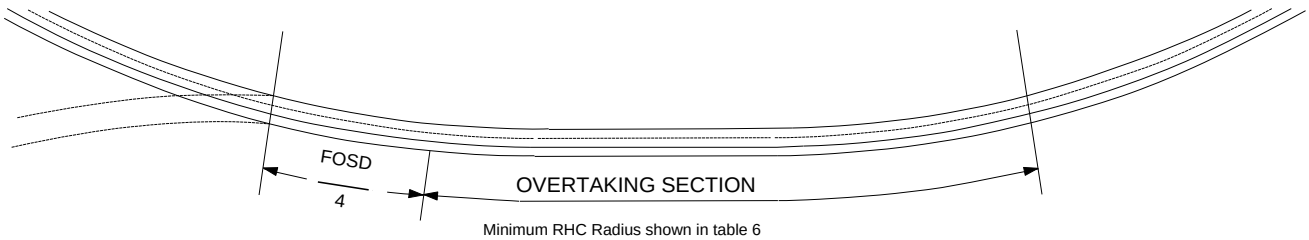

Figure 21 Single Downhill Lanes

7.16 Dual Sections : Dual Sections are sections with dual carriageways, which provide overtaking opportunities throughout their length. They should, however, only be overtaking provided in cases where the most economic method of improvement of a section of existing single carriageway is to provide a second carriageway alongside the first. Dual Overtaking Sections within otherwise single carriageway roads shall be subject to the same overtaking length criteria as climbing lane sections shown at Paragraph 7.10. S4 sections (where space is limited) should be considered equivalent to Dual Sections in terms of assessment of overtaking.

Non-overtaking Sections

7.17 Non-overtaking sections are all left or right hand curves on level sections or single downhill lanes that do not conform with the requirements of Paragraphs 7.7 to 7.16 (see also Non-overtaking crests Paragraph 7.19).

Obstructions to Overtaking

7.18 At Grade Junctions: Major/minor junctions with ghost islands or single lane dualling according to the Overseeing Department's current criteria, and roundabouts should be considered as obstructions to overtaking if they are sited within an otherwise Overtaking Section. The Overtaking Section shall be considered to terminate at a distance of FOSD/4m prior to the nose of the ghost or physical island, or the roundabout give way line, as shown in Figure 22. Simple junctions and accesses, however, with no central ghost or physical islands can be ignored.

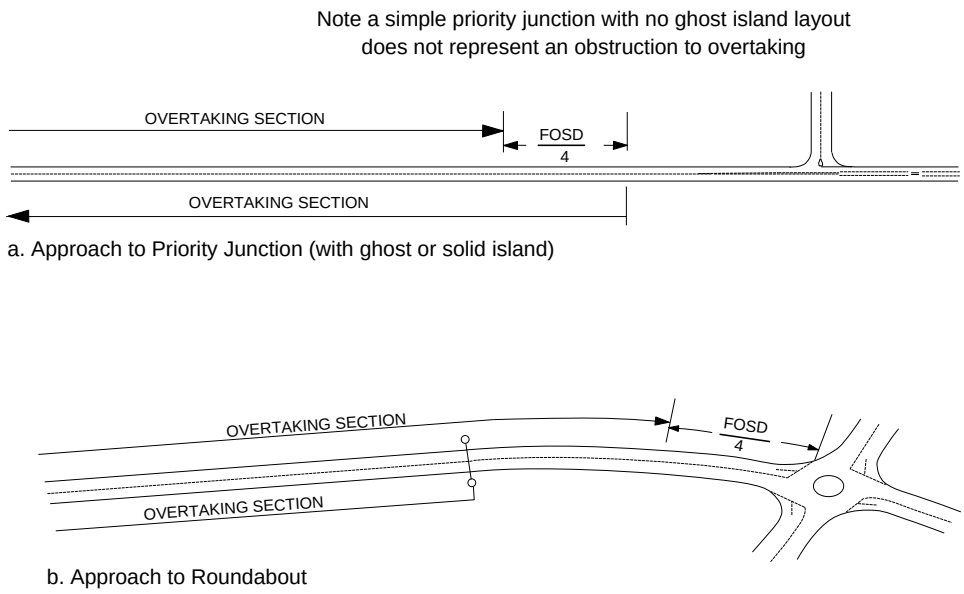

Figure 22 Obstructions to Overtaking

Non-overtaking Crests

7.19 A crest provided with less than FOSD shown in Table 3 should be considered as a Non-overtaking Section. The Overtaking section within which it occurs should be considered to terminate at the point at which sight distance has reduced to FOSD/2, as shown in Figure 23. However, the use of Desirable Minimum crest K values will result in a continuous sight distance only slightly above FOSD/2, and thus, theoretically, the Overtaking Section will be continuous over the crest (and warning markings will not be strictly justified). The use of Desirable crest K values is not recommended for single carriageway design (see Paragraph 2.8).

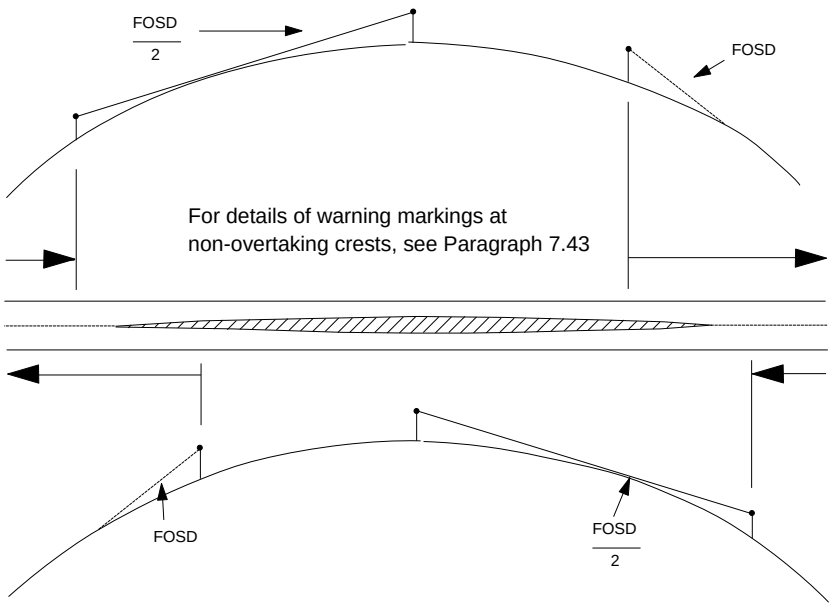

Figure 23 Non-overtaking Crest

Overtaking Value

7.20 A sight distance analysis shall be carried out for each direction of travel to ensure that there are sufficient and effective Overtaking Sections at frequent intervals along the scheme. The total length of Overtaking Sections for each direction shall be summed and divided by the total length of the road improvement to obtain the "Overtaking Value" in each direction, expressed as a percentage. The minimum Overtaking Values for the different road types which are thought to provide a reasonably safe road in most circumstances are given in Table 7.

Road Type (Table 4)	Overtaking Value
Category 1	15%
Categories 2 & 3	30%
Category 4	40%

Table 7 Overtaking Provision

The table applies to new construction and new schemes exceeding 2km. Overtaking sections should be distributed along a length of road such that no Non-overtaking Section exceeds 3km. The results of the sight distance analysis should be plotted on the engineering drawings, with the system of road markings to be adopted along the route included below the plot, see Paragraphs 7.7, 7.10, 7.13, 7.19, 7.29, 7.30, 7.42 and 7.43. This is to ensure that the significance of the various interacting parameters has been taken account of at an early date. Generally speaking it is an advantage from a safety point of view to provide as much overtaking distance as possible, but the amount of provision above the minimum in each scheme must be a matter of judgement according to the particular circumstances, taking all relevant factors into account.

7.21 The Overtaking Sections along a scheme, which may comprise combinations of the various types shown in Paragraphs 7.5 to 7.16 should be provided by the most economic means. In some instances it may be suitable to use a few long sections, whilst in other cases more frequent shorter sections, linked with Non-overtaking Sections, would provide the most economic strategy to achieve the appropriate Overtaking Value. Alternative designs should be tested by COBA (Scotland - NESA).

7.22 The Overtaking Values shown shall be provided a minimum level of provision. Using the principles described in this Standard it should be possible in the majority of cases to obtain these values without significant extra expenditure on alignment, and detailed guidance is given in Paragraph 7.24. It must be appreciated, however, that a single carriageway will never provide an equal "level of service" with a dual carriageway. There will always be greater interactions between fast and slow moving vehicles on single carriageways, and overtaking manoeuvres will always be hazardous, involving difficult decisions by drivers, whereas dual carriageways permit continuous overtaking without interference with opposing traffic. These implications, however, result in reduced speeds and increased accident rates on single carriageways that are already implicit in the cost/benefit trade-off of alternative standards of design, although the "level of service" or driver-comfort differentials cannot be costed. Provided the requisite Overtaking Values are achieved, therefore, a satisfactory single carriageway design will result. Any additional measures to increase Overtaking Values beyond the requisite levels, such as the provision of additional climbing lanes,straightening route sections, or elimination of junctions, shall be justified in economic/environmental terms.

7.23 Schemes Less Than 2km in Length : Schemes less than 2km in length shall be integrated with the contiguous sections of existing road to provide the best overtaking opportunities that can be economically devised. Where contiguous sections afford little or no overtaking opportunities, it is essential that the requisite Overtaking Value be achieved for the scheme. On short bypasses this will result in the need to provide at least one Overtaking Section in either direction. However, where contiguous sections provide good overtaking opportunities, a check on the Overtaking Value for a length of, say, 3km including the bypass may relieve the necessity to provide the requisite Overtaking Value for the bypass.

7.24 Means of Improving Overtaking Value : As well as ensuring sufficient overtaking opportunities, the method also controls the spacing of junctions. If the criteria are not met initially for any alignment it may be necessary to:

a) Modify the junction strategy by stopping up, bridging, or diverting some side roads.

b) Adjust the alignment to produce more straight sections.

c) Introduce climbing lanes on hills previously not considered justified because of low traffic flow.

d) Introduce roundabouts at the more heavily trafficked priority junctions to create sharper changes of direction and improve Overtaking Section lengths.

e) Introduce lengths of WS2 road at suitable locations. Whilst this will not improve the Overtaking Value according to the formal methods described in Paragraphs 7.5 to 7.16, WS2 sections will nevertheless, by the extra road width, increase flexibility and reduce frustration.

f) Introduce more extensive sections of S4 or dual carriageways.

Alternative means of improving Overtaking Values should be tested by COBA (Scotland - NESA) to determine their economic implications. This will take into account any changes in user costs due to increased junction delays, diversion costs, or increased speeds due to increased road width, etc. The minimum overall additional cost of improving Overtaking Values in terms of loss of NPV should be identified, and an assessment made taking all factors into account, including the effect on the road user.

The extra cost of provision of 2.7m road width to provide a climbing lane at a hill previously considered unjustified (or a section of WS2 on a constrained level road alignment) may be justified on the total balance of advantage. As the wider road will also provide some improved benefits, the resulting loss of NPV may only be minor and thus a small price to pay for the unquantifiable benefits to traffic of improving the Overtaking Value.

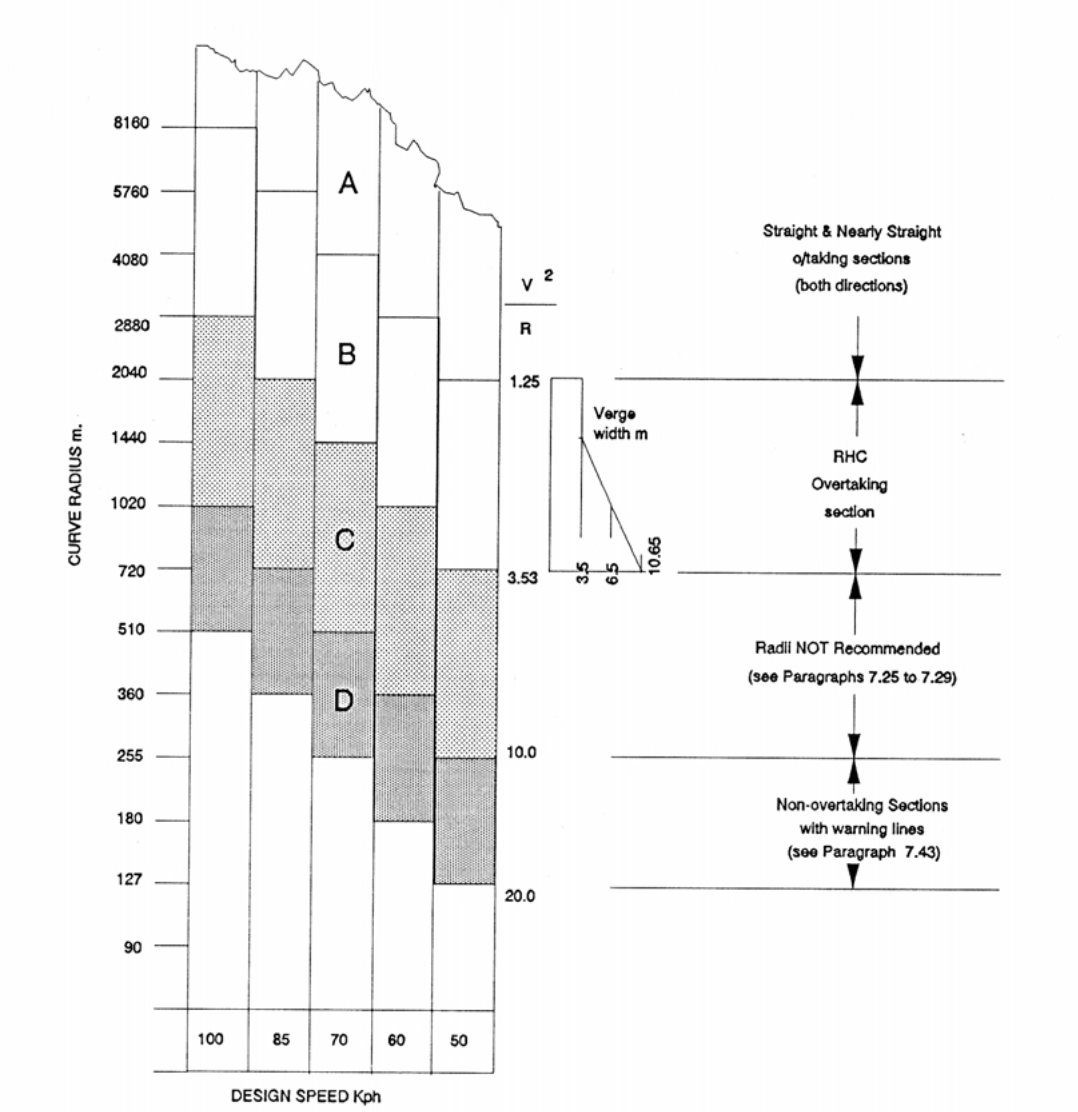

Figure 24 Horizontal Curve Design

Horizontal Curve Design

7.25 The use of mid-large radius curves is counter productive, inhibiting the design of clear Overtaking Sections. They produce long dubious overtaking conditions for vehicles travelling in the left hand curve direction, and simply reduce the length of overtaking straight that could otherwise be achieved.

Figure 24 shows a curve selection chart for horizontal curves, which illustrate the bands of radii (relative to Design Speed) and their applicability in the design of single carriageways.

7.26 Wherever possible, level Overtaking Sections and climbing lanes shall be provided as straight or nearly straight sections (band A), thus providing an Overtaking Section for both directions of travel ($V^2/R < 1.25$).

7.27 Where straight sections are not possible, lower radii will result in right hand curve (RHC) Overtaking Sections:

On level sections following the achievement of FOSD

On single lane downhill sections

The lower limit of Band B ($V^2/R = 3.53$) shown for RHC Overtaking Sections should be considered as the minimum radius for use in designing Overtaking Sections. At this level visibility for left hand curve (LHC) traffic has deteriorated significantly, and a maximum verge width of 10.65m would be required to maintain FOSD within the highway for RHC traffic.

7.28 The use of radii in Band C ($V^2/R = 3.53$-10) is highly undesirable and not recommended, as they introduce long sections with dubious overtaking conditions for LHC traffic. Where visibility is constrained within the highway, either excessive verge widening would be required to maintain FOSD for RHC traffic, or the natural visibility without verge widening at these radii would result in dubious overtaking conditions for the RHC traffic also. It is a paramount principle, therefore, that design should concentrate only on Bands A and B for clear Overtaking Sections, and Band D for clear Non-overtaking Sections.

7.29 Non-overtaking Sections should be designed using the radii shown in Band D ($V^2/R = 10$-20), where the radius is sufficiently small to represent a clearly Non-overtaking Section requiring the use of warning lines (but see Paragraph 7.43 re. road markings). Radii of Non-overtaking Sections should be chosen around the centre of Band D ($V^2/R = 14$) to strike a balance between providing clear Non-overtaking Sections and avoiding steep superelevation.

Vertical Curve Design

7.30 The vertical alignment shall be coordinated with the horizontal alignment to ensure the most efficient overtaking provision. On level Overtaking Section, the vertical curvature shall be sufficient to provide for FOSD in accordance with Paragraphs 2.3 to 2.5. However, for Non-overtaking Sections and climbing lanes, the use of large crest curves is quite unnecessary and not recommended. Unless a vertical curve can have a large enough K value to provide FOSD (thus forming an Overtaking Section) a long section of dubious visibility will result, which cannot justify warning markings , but inadequate sight distance for overtaking still exists (see Paragraph 7.19). Therefore, provided a K value of one Design Speed step below Desirable Minimum K value is achieved, further improvement to Desirable Minimum K value or above will be counter productive, simply increasing costs, increasing the length of dubious crest visibility, and reducing the length of clear Overtaking Sections that could otherwise be achieved.

7.31 Horizontal and vertical visibility shall be carefully coordinated to ensure that Sight Distance at curves on crests is correlated. For example, it would be unnecessary to acquire additional verge width to provide for Desirable Minimum Stopping Sight Distance in the horizontal sense, when the crest only provides a stopping sight distance of one Design Speed step below Desirable Minimum Stopping Sight Distance. To increase both verge width and crest radius for Desirable Minimum Stopping Sight Distance would be counter productive in overtaking design as in Paragraphs 7.25 to 7.31.

Junction Strategy

7.32 The aim should be to provide drivers with layouts that have consistent Standards and are not likely to confuse them. On lengths of inter-urban road, sequences of junctions should not therefore involve many different layout types. For example, a length of route or bypass containing contiguous roundabouts, single lane dualling, ghost islands, simple priority junctions and grade separation would inevitably create confusion and uncertainty for drivers and cause accidents on that account. The safest road schemes are usually the most straightforward ones that contain no surprises for the driver.

7.33 Major/minor junctions with ghost islands or local single lane dualling and roundabouts represent an obstruction to overtaking. To achieve maximum overtaking efficiency, therefore, straight Overtaking Sections should be located wherever possible between junctions, which can be located in Non-overtaking Sections. Visibility to the junction shall be a minimum of Desirable Stopping Sight Distance, and advance warning arrows to islands should be made visible from the overtaking straight wherever possible.

7.34 Use of a roundabout will enable a change of alignment at a junction, thus optimising the Overtaking Sections either side. As an alternative to continuing large radius curves into the roundabout with only unidirectional overtaking, it is preferable to utilise a straight section followed by a non-overtaking radius as the final approach, in order to optimise the use of two directional overtaking straights, as shown in Figure 25.

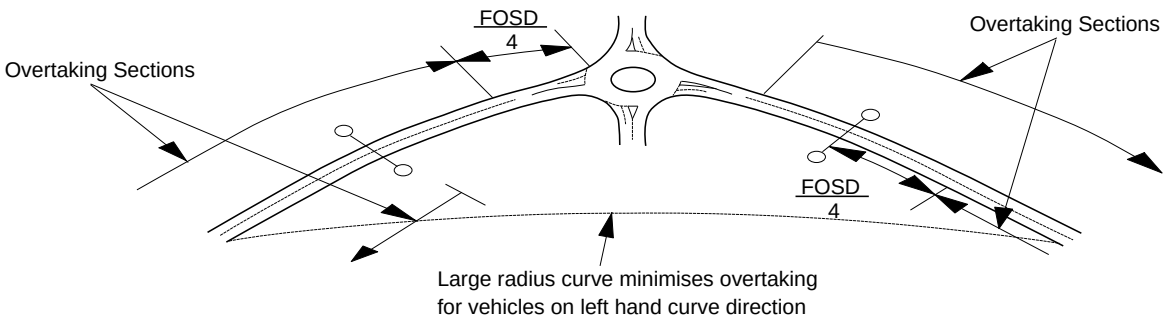

Figure 25 Use of Roundabout to Change Alignment

7.35 Designs involving grade separation of single carriageway roads should be treated with caution. Some grade separated crossings will be necessary for undesirable side road connections and for agricultural purposes. Experience has shown that frequent overbridges and the resulting earthworks create the impression of a high speed road, engendering a level of confidence in the road alignment that cannot be justified on single carriageways, where opposing traffic travels on the same carriageway. The provision of regular at grade junctions with ghost islands, local dualling or roundabouts will maintain the impression of a single carriageway road. Where crossing flows are high, or local topographical conditions would suggest the need for a grade separated junction, the single quadrant link with a conventional ghost island junction, as shown in Figure 26, will maintain the impression of a single carriageway road, with conventional single carriageway turning movements and minimise the disruptive right turn movement onto the major road. The link should be located in the quadrant that will ensure the larger turning movements become left turns onto and right turns off the major road. With the highest levels of traffic flow, it may be necessary to provide roundabouts at one or both ends of the link road. The use of slip merges can be confusing on single carriageways and create problems with merging into a single lane. They destroy the overall impression of a single carriageway, and shall not be used.

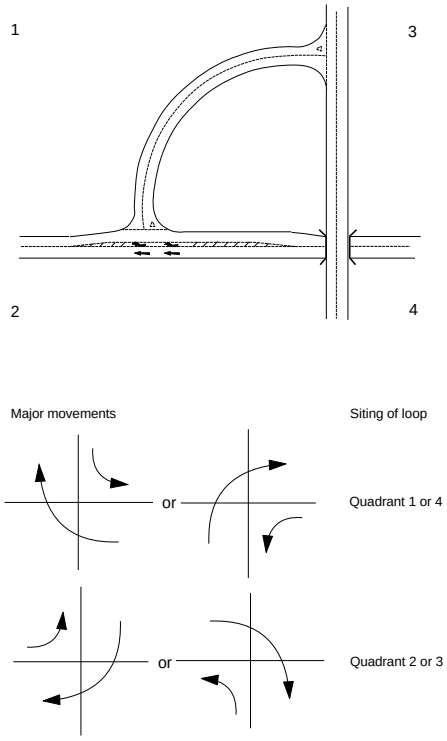

Figure 26 Single Quadrant Link

Changes in Carriageway Width

7.36 Changes from dual to single carriageways are a potential hazard situation and the aim in new construction should be to provide continuity of road type, either single or dual carriageway layout, on any major section of a route which carries consistently similar traffic, subject to satisfactory economic and environmental assessments. Exceptions are described below. Where it is not possible to achieve an adequate Overtaking Value by means of level Overtaking Sections or climbing lanes, the impression of a single carriageway road shall be maintained by utilising WS2 sections at suitable locations (see Paragraph 7.24), or short sections of S4, rather than introducing sections of dual carriageway.

7.37 Single carriageways of a type containing wide verges and extensive earthworks prepared for eventual dualling create the illusion of driving on a dual carriageway, which leads to abnormally high serious accident rates. Where staged construction is part of the design or there are safety problems at existing sites, provision shall be made to avoid giving drivers an illusion that they are on a dual carriageway rather than on a single carriageway such as:

a) Fencing of a permanent appearance at a verge width (normally 3.5m) from the channel of the constructed carriageway on the side reserved for the future carriageway; combined with quick growing evergreen planting at the fence.

b) Clear signing and marking indicating the existence of two way traffic.

c) Where a changeover occurs at a roundabout, a narrow physical splitter island not less than 50 metres long on the single carriageway side of the roundabout followed by hatching.

7.38 Where there is an overbridge designed for an eventual second carriageway, the illusion of a second running carriageway shall be removed by planting and earth mounds as shown in Figure 27.

7.39 Where a lighter trafficked bypass occurs within an otherwise dual carriageway route, a single carriageway may be acceptable provided the terminal junctions such as roundabouts give a clear indication to drivers of changed Standards see Figure 28, Paragraph 7.37 b and c.

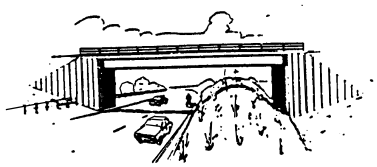

Figure 27

7.40 In circumstances where a length of new carriageway alongside an existing single carriageway provides the most suitable and economic means of achieving a dualled Overtaking Section and where such a dual carriageway returns to single carriageway width or in any other case, the change in width shall be made abundantly clear to drivers by:

a) Signing and marking indicating the existence of the single carriageway.

b) Providing a length of central reserve in advance of the taper such that drivers approaching the single carriageway can see across it, to have a clear view of the approaching traffic moving on to the dual carriageway.

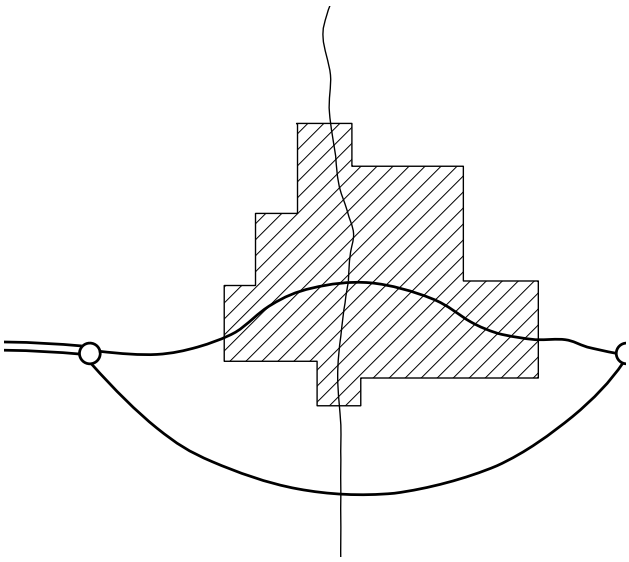

Figure 28

7.41 If lengths of dual carriageway within a generally single carriageway road or vice-versa are unavoidable they shall be at least 2km in length and preferably 3km, and major/minor junctions shall be avoided within 1 kilometre of the end of the central reserve on either type of carriageway, see Paragraph 7.39.

Road Markings

7.42 The continuous provision of a stopping sight distance up to one Design Speed step below Desirable Minimum will result in the visibility provision being above the threshold of double white lines, although warning lines to will be required at non-overtaking curves and solid/dotted combinations will be required on climbing lanes. There are, however, a limited number of applications of double solid white lines, for example at crests at the end of climbing lanes, double white lines shall be used at the commencement of the single downhill lane, in accordance with Paragraph 5.11 and Figures 13-15.

7.43 At non-overtaking horizontal curves, and crests (see Paragraph 7.30), where warning markings would normally be required, the markings may be strengthened with a hatched marking as shown in Figure 29, especially following Overtaking Sections, in order to make clear to drivers the presence of undesirable overtaking conditions.

Existing Single Carriageway Improvements

7.44 The design Standards contained in the preceding paragraphs apply generally to lengths of new single carriageway construction, from short bypasses and diversions to extensive new single carriageway routes. When dealing with existing rural roads, the need for improvements will frequently be dictated by evident dangerous bends, junctions, narrow sections, hills, etc for the improvement of which the Standards shown in Chapters 1 to 5, Elements of Design, will be applicable.

7.45 Where, however, the need for improvement arises from congested conditions, or from a restricted alignment providing an unsatisfactory regime of flow, attention should be focused upon the provision of adequate Overtaking Sections, as in Paragraphs 7.20 to 7.24. One of the most economic methods of improving Overtaking Value is the provision of climbing lanes on hills, where slow moving vehicles create severe congestion and consequent delays, (or a second carriageway added to the first), instead of a major realignment to create a level Overtaking Section elsewhere.

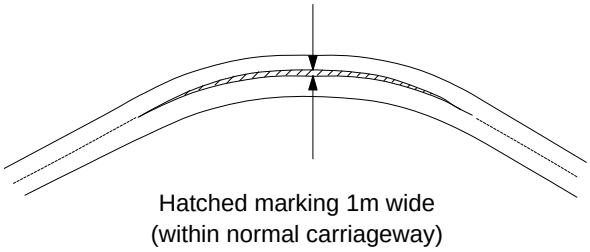

Figure 29 Hatched Road Marking at Non-overtaking Curves & Crests

7.46 On a long length carrying consistently similar traffic which has been defined for more major improvement, it is important to have a comprehensive strategy to maintain an acceptable level of service and safe conditions, and ways of implementing the strategy in stages must be evolved to suit expenditure profiles. The techniques contained throughout Chapters 6 and 7 shall be used when formulating the overall strategy, which, after elimination of dangerous bends, junction improvements, etc, should concentrate upon the provision of adequate Overtaking Sections. Whilst the vertical and horizontal alignments shall be coordinated in accordance with the preceding paragraphs for all newly constructed diversions and bypasses, there will frequently be little necessity for such coordination on the remaining sections which, although not conforming to formal Standards, may not demonstrate any operating problems.

Staged Construction

7.47 Where a single carriageway is being considered as a first stage of an eventual dual carriageway improvement, the single carriageway shall be designed in accordance with the coordinated design aspects shown in Chapter 7. This will ensure that the impression of an essentially at-grade single carriageway road is maintained. Where it is economic to carry out some earthworks or bridgeworks for the dual carriageway in the first stage, care must be taken to ensure that the wider formation and bridges do not create the illusion of a dual carriageway. At bridges, such an illusion can be avoided by the methods described in Paragraph 7.38, and generous planting can reduce the overall impression of space.

7.48 The overriding requirements for clear Overtaking Sections in the first stage design will mean that the flowing alignment requirements for dual carriageways (as shown in Paragraph 8.7) will not be possible or desirable. However, first stage designs should be checked to ensure that the horizontal and vertical alignments are phased sufficiently to eliminate any areas where misleading visual effects in perspective might occur, for example, broken back alignments.

8. DUAL CARRIAGEWAYS AND MOTORWAYS

General Principles

8.1 All purpose dual carriageways and motorways shall be designed to permit light vehicles to maintain the Design Speed. Subject to traffic conditions, light vehicles can overtake slower moving vehicles throughout, without conflict with opposing traffic, and drivers are free to travel at a speed controlled only by the constraints described in Chapter 1. Unlike single carriageways, therefore, there is no limitation upon the use of horizontal or vertical curves in excess of the values for one Design Speed Step below Desirable Minimum values, and the coordination of design elements will mainly involve the design and optimisation of aesthetic alignments.

8.2 In the coordination of vertical and horizontal alignments, the principles contained in Paragraph 8.7 (Category 7a and 8b dual carriageways) are generally desirable for all dual carriageway designs. However, for the lower categories of design, with consequently lower traffic flows, a high Standard of aesthetic design may frequently not be justifiable, particularly where the dual carriageway represents an alternative to a single carriageway.

All Purpose Dual Carriageways

8.3 Category 5 (Table 4) : This is the lowest category of dual carriageway which will normally represent an alternative layout option to single carriageway types S2 or WS2.

8.4 The vertical alignment should follow the topography closely with the horizontal alignment phased to match. All junctions should be at-grade, with roundabouts at the more heavily trafficked intersections, although where economically/environmentally feasible, grade separated solutions should be provided.

8.5 Major/Minor junctions on dual carriageways are a source of accidents, but collecting together side roads or increased provision of grade separation are costly alternatives that may not be economically justified. Furthermore, where the dual carriageway is being assessed as an alternative option to a single carriageway, the additional costs of higher Standards of junction or alignment provision, together with the resulting higher overall earthworks and structural implications, may well cause the dual carriageway option to be so costly as to be uneconomic, in spite of its inherently superior performance in terms of link accidents and user costs. A category 5 dual carriageway, therefore, should be designed essentially as an at-grade alternative to an at-grade single carriageway, and elements of design, such as junctions, should be enhanced only if there is economic or environmental justification for doing so. In this way, dual carriageways will frequently demonstrate superior economic performance to a single carriageway at flows well below the upper limits of single carriageway demand flows.

8.6 Categories 6 & 7c (Table 4) : In these categories, gaps in the central reserve for turning traffic are not permissible, and major/minor junctions shall not be used. Minor side roads shall be stopped up, provided with left in/left out connections, or grade separated without connection. In category 6, major intersection types, which may include roundabouts, will be determined by site conditions, traffic demand, and economic/environmental effect. In category 7, however, the high costs of delays caused by roundabouts will normally result in more economic grade separated solutions. The combined vertical/horizontal alignments should follow the topography as much as possible, without purposely achieving a "motorway" type of flowing alignment.

8.7 Categories 7a and 8b (Table 4) : These are the highest categories of all-purpose road, where all intersections, both major and minor, shall be grade separated. A smooth flowing alignment is required for sustained high speeds. The following are the principles to be followed in securing a satisfactory alignment.

a) Care shall be taken to ensure that embankments and cuttings do not make severe breaks in the natural skyline.

b) When negotiating a ridge in cutting or passing through a broad stretch of woodland, the road shall be on a curve whenever possible so as to preserve an unbroken background.

c) Short curves and straights shall not be used. Adjacent curves shall be similar in length.

d) Small changes of direction shall not be made, as they give the perspective of the road ahead a disjointed appearance.

e) Curves of the same or opposite sense

which are visible from one another shall not be connected by a short straight. It is better to introduce a flat curve between curves of the same sense, or to extend the transition curves to a common point between curves of the opposite sense.

f) Changes in horizontal and vertical alignment shall be phased to coincide whenever possible. This is very important with horizontal curves sharper than 2,000m radius and vertical curves of less than 15,000m radius.

g) Flowing alignment can most readily be achieved by using large radius curves rather than straights.

h) The profile of the road over bridges must form part of the easy flowing alignment.

i) At the start of horizontal curves superelevation must not create large flat areas on which water would stand.

j) Horizontal and vertical curves shall be made as generous as possible at interchanges in order to enhance sight distances.

k) Sharp horizontal curvature shall not be introduced at or near the top of a pronounced crest. This is hazardous especially at night because the driver cannot see the change in horizontal alignment.

l) The view of the road ahead shall not appear distorted by sharp horizontal curvature introduced near the low point of a sag curve.

Motorways

8.8 The high standard of motorway design results in high speeds throughout, by complete elimination of access other than at interchanges and service areas, prohibition of usage by pedestrians and certain vehicle types and use of hard shoulders, coupled with the generous flowing alignment. Design Speeds shall be in the 120 kph category for rural motorways but less in urban cases.

8.9 The relevant alignment Standards are given in Chapters 2 to 5 and the rules in Paragraph 8.7 shall be followed. Additionally:

Horizontal and Vertical Curves should be as generous as possible throughout.

To relieve the monotony of driving on a road with such good extensive forward visibility, long sections of the road should be aligned to give a view of some prominent feature ahead.

9. REFERENCES

TD 42/95 Geometric Design Of Major/Minor Junctions. (DMRB 6.2)

TD 46/97 Traffic Flow Ranges For Use In The Assessment Of New Rural Roads. (DMRB 5.1)

TD 79/99 Traffic Capacity Of Urban Roads. (DMRB 5.1)

Environmental Assessment. (DMRB 11.3)

COBA Cost Benefit Analysis. (DMRB 13.1)

QUADRO Queues and Delays at Roadworks. (DMRB 14.1)

NESA Economic Assessment of Road Schemes in Scotland, The NESA Manual. (DMRB 15.1)

Multi Modal Appraisal

NRTF National Road Traffic Forecasts, GB

Traffic Signs Regulations and General Directions

Traffic Signs Manual Chapter 5, Road Markings

Highways Act 1980

Roads Scotland Act 1984

Roads in Upland Areas: A Design Guide. Welsh Office

Roads in Lowland Areas: A Design Guide. Welsh Office

10. ENQUIRIES

All technical enquiries or comments on this Standard should be sent in writing as appropriate to:

Chief Highway Engineer The Highways Agency St Christopher House Southwark Street London SE1 0TE	G CLARKE Chief Highway Engineer

Chief Road Engineer Scottish Executive Development Department Victoria Quay Edinburgh EH6 6QQ	J HOWISON Chief Road Engineer

Chief Highway Engineer The National Assembly for Wales Cynulliad Cenedlaethol Cymru Crown Buildings Cathays Park Cardiff CF10 3NQ	J R REES Chief Highway Engineer

Director of Engineering Department for Regional Development Roads Service Clarence Court 10-18 Adelaide Street Belfast BT2 8GB	G W ALLISTER Director of Engineering

HARMONIC MEAN VISIBILITY

1. The Harmonic Mean Visibility VISI shall be measured over a minimum length of about 2km in the following manner. Measurements of sight distance shall be taken in both directions at regular intervals (50m for sites of uneven visibility, 100m for sites with good visibility) measured from eye height of 1.05m to an object height of 1.05m, both above the centre line of the road surface. Sight distance shall be the true sight distance available at any location, taking into account both horizontal and vertical curvature, including any sight distance available across verges and outside the highway boundary wherever sight distance is available across embankment slopes or adjoining land, as shown in Figure A.

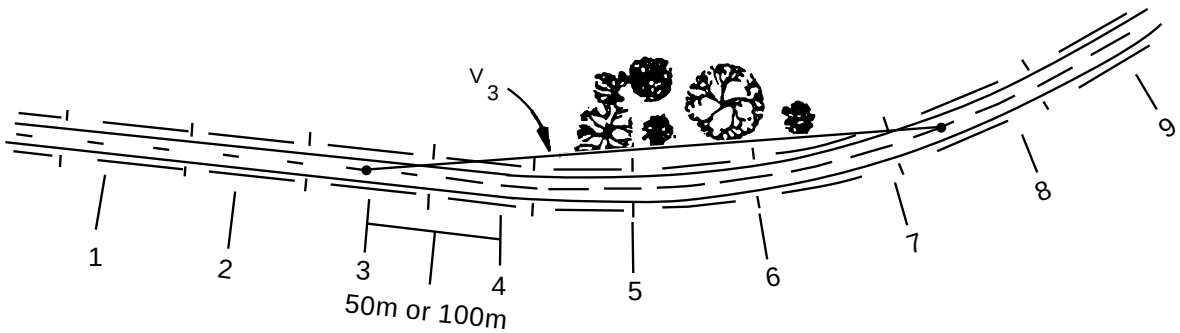

Figure A Measurement of HMV

2. Harmonic Mean Visibility is the harmonic mean of individual observations, such that:

$$VISI = \frac{n}{\frac{1}{V_1} + \frac{1}{V_2} + \frac{1}{V_3} .... + \frac{1}{V_n}}$$

where:-

n = number of observations
V1 = sight distance at point 1, etc.

3. For existing roads, an empirical relationship has been derived which provides estimates of VISI given in bendiness and verge width (applicable up to VISI = 720m) i.e.

$$\text{Log}_{10} \text{VISI} = 2.46 + \text{VW}/25 - \text{B}/400$$

where:

VW = Average verge width (averaged for both sides of the road)

B = Bendiness (Degree per km - minimum Length of about 2 km)

This relationship is valid for existing roads, but on long straight roads, or where sight distance is available outside the highway boundary, significant underestimates of VISI will result.

4. For preliminary route analysis, where detailed measurements of sight distance are not available, the following typical values should be used:

4.1 On long virtually straight roads, or where the road is predominantly on embankment affording high visibility across embankment slopes or adjoining level land:

VISI = 700m

4.2 If a new road is designed with continuous overtaking visibility, with large crest K values and wide verges for visibility:

VISI = 500m

4.3 Where a new road is designed with frequent Overtaking Sections, but with stopping sight distance provision at all sharp curves:

VISI = 300m

4.4 Where an existing single carriageway contains sharp bends, frequent double white line sections, narrow verges, etc.

VISI = 100 - 200m

although the empirical formula shown in 3 above can be used if Bendiness is available.